3.5V to 42V STEP DOWN SWIFT™ DC/DC CONVERTER WITH ECO-MODE™

Check for Samples: TPS54240

FEATURES

- **3.5V to 42V Input Voltage Range**
- **200-mΩ High-Side MOSFET**
- **High Efficiency at Light Loads with a Pulse Skipping Eco-Mode™**
- **138μA Operating Quiescent Current**
- **1.3μA Shutdown Current**
- **100kHz to 2.5MHz Switching Frequency**
- **Synchronizes to External Clock**
- **Adjustable Slow Start/Sequencing**
- **UV and OV Power Good Output**
- **Adjustable UVLO Voltage and Hysteresis**
- **0.8-V Internal Voltage Reference**
- **MSOP10 Package With PowerPAD™**
- **Supported by SwitcherPro™ Software Tool (http://focus.ti.com/docs/toolsw/folders/print/switcherpro.html)**
- **For SWIFT™ Documentation, See the TI Website at http://www.ti.com/swift**

APPLICATIONS

- **12-V and 24-V Industrial and Commercial Low Power Systems**
- **GSM, GPRS Modules in Fleet Management, E-Meters, and Security Systems**

DESCRIPTION

The TPS54240 device is a 42V, 2.5A, step down regulator with an integrated high side MOSFET. Current mode control provides simple external compensation and flexible component selection. A low ripple pulse skip mode reduces the no load, regulated output supply current to 138μA. Using the enable pin, shutdown supply current is reduced to 1.3μA, when the enable pin is low.

Under voltage lockout is internally set at 2.5V, but can be increased using the enable pin. The output voltage startup ramp is controlled by the slow start pin that can also be configured for sequencing/tracking. An open drain power good signal indicates the output is within 94% to 107% of its nominal voltage.

A wide switching frequency range allows efficiency and external component size to be optimized. Frequency fold back and thermal shutdown protects the part during an overload condition.

The TPS54240 is available in 10 pin thermally enhanced MSOP Power Pad™ package.

SIMPLIFIED SCHEMATIC

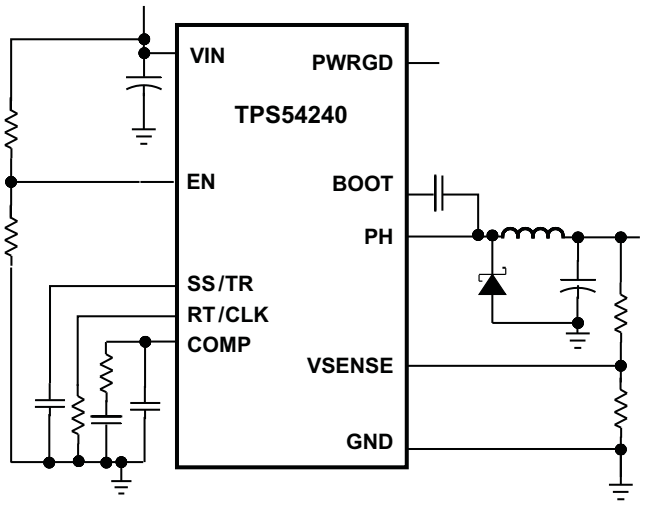

EFFICIENCY vs LOAD CURRENT

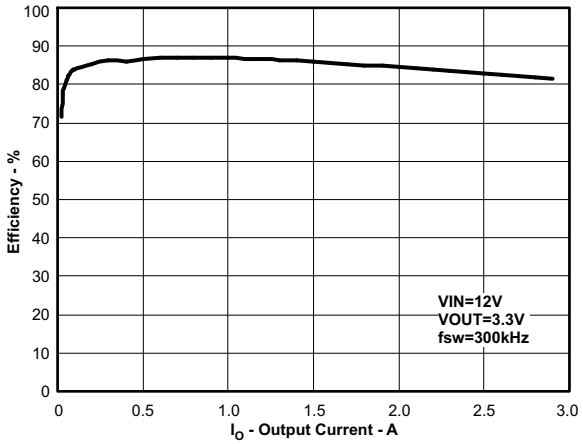

Please be aware that an important notice concerning availability, standard warranty, and use in critical applications of Texas Instruments semiconductor products and disclaimers thereto appears at the end of this data sheet.

Eco-Mode, PowerPAD, SwitcherPro, SWIFT are trademarks of Texas Instruments.

PRODUCTION DATA information is current as of publication date. Products conform to specifications per the terms of the Texas Instruments standard warranty. Production processing does not necessarily include testing of all parameters.

Copyright © 2010, Texas Instruments Incorporated

This integrated circuit can be damaged by ESD. Texas Instruments recommends that all integrated circuits be handled with appropriate precautions. Failure to observe proper handling and installation procedures can cause damage.

ESD damage can range from subtle performance degradation to complete device failure. Precision integrated circuits may be more susceptible to damage because very small parametric changes could cause the device not to meet its published specifications.

Table 1. ORDERING INFORMATION(1)

T_J	PACKAGE	PART NUMBER(2)
–40°C to 150°C	10 Pin MSOP	TPS54240DGQ

(1) For the most current package and ordering information see the Package Option Addendum at the end of this document, or see the TI website at www.ti.com.
(2) The DGQ package is also available taped and reeled. Add an R suffix to the device type (i.e., TPS54240DGQR).

ABSOLUTE MAXIMUM RATINGS(1)

Over operating temperature range (unless otherwise noted).

		VALUE	UNIT
Input voltage	VIN	–0.3 to 47	V
	EN	–0.3 to 5	
	BOOT	55	
	VSENSE	–0.3 to 3	
	COMP	–0.3 to 3	
	PWRGD	–0.3 to 6	
	SS/TR	–0.3 to 3	
	RT/CLK	–0.3 to 3.6	
Output voltage	BOOT-PH	8	V
	PH	–0.6 to 47	
	PH, 10-ns Transient	–2 to 47	
Voltage difference	PAD to GND	±200	mV
Source current	EN	100	µA
	BOOT	100	mA
	VSENSE	10	µA
	PH	Current Limit	A
	RT/CLK	100	µA
Sink current	VIN	Current Limit	A
	COMP	100	µA
	PWRGD	10	mA
	SS/TR	200	µA
Electrostatic discharge (HBM) QSS 009-105 (JESD22-A114A)		2	kV
Electrostatic discharge (CDM) QSS 009-147 (JESD22-C101B.01)		500	V
Operating junction temperature		–40 to 150	°C
Storage temperature		–65 to 150	°C

(1) Stresses beyond those listed under *absolute maximum ratings* may cause permanent damage to the device. These are stress ratings only and functional operation of the device at these or any other conditions beyond those indicated under *recommended operating conditions* is not implied. Exposure to absolute-maximum-rated conditions for extended periods may affect device reliability.

Copyright © 2010, Texas Instruments Incorporated

PACKAGE DISSIPATION RATINGS(1)

PACKAGE	THERMAL IMPEDANCE JUNCTION TO AMBIENT
MSOP	57 °C/W

(1) Test board conditions:
A. 3 inches × 3 inches, 2 layers, thickness: 0.062 inch
B. 2-ounce copper traces located on the top and bottom of the PCB
C. 6 (13 mil diameters) THERMAL VIAS LOCATED UNDER THE DEVICE PACKAGE

ELECTRICAL CHARACTERISTICS

T_J = –40°C to 150°C, VIN = 3.5 to 42V (unless otherwise noted)

PARAMETER	TEST CONDITIONS	MIN	TYP	MAX	UNIT
SUPPLY VOLTAGE (VIN PIN)					
Operating input voltage		3.5		42	V
Internal undervoltage lockout threshold	No voltage hysteresis, rising and falling		2.5		V
Shutdown supply current	EN = 0 V, 25°C, 3.5 V ≤ VIN ≤ 42 V		1.3	4	μA
Operating : nonswitching supply current	VSENSE = 0.83 V, VIN = 12 V, 25°C		138	200	μA
ENABLE AND UVLO (EN PIN)					
Enable threshold voltage	No voltage hysteresis, rising and falling, 25°C	1.15	1.25	1.36	V
Input current	Enable threshold +50 mV		–3.8		μA
	Enable threshold –50 mV		–0.9		μA
Hysteresis current			–2.9		μA
VOLTAGE REFERENCE					
Voltage reference	T_J = 25°C	0.792	0.8	0.808	V
		0.784	0.8	0.816	V
HIGH-SIDE MOSFET					
On-resistance	VIN = 3.5 V, BOOT-PH = 3 V		300		mΩ
	VIN = 12 V, BOOT-PH = 6 V		200	410	mΩ
ERROR AMPLIFIER					
Input current			50		nA
Error amplifier transconductance (g_M)	–2 μA < I_{COMP} < 2 μA, V_{COMP} = 1 V		310		μMhos
Error amplifier transconductance (g_M) during slow start	–2 μA < I_{COMP} < 2 μA, V_{COMP} = 1 V, V_{VSENSE} = 0.4 V		70		μMhos
Error amplifier dc gain	V_{VSENSE} = 0.8 V		10,000		V/V
Error amplifier bandwidth			2700		kHz
Error amplifier source/sink	$V_{(COMP)}$ = 1 V, 100 mV overdrive		±27		μA
COMP to switch current transconductance			10.5		A/V
CURRENT LIMIT					
Current limit threshold	VIN = 12 V, T_J = 25°C	3.5	6.1		A
THERMAL SHUTDOWN					
Thermal shutdown			182		°C

Copyright © 2010, Texas Instruments Incorporated

ELECTRICAL CHARACTERISTICS (continued)

T_J = –40°C to 150°C, VIN = 3.5 to 42V (unless otherwise noted)

PARAMETER		TEST CONDITIONS	MIN	TYP	MAX	UNIT
TIMING RESISTOR AND EXTERNAL CLOCK (RT/CLK PIN)						
	Switching Frequency Range using RT mode		100		2500	kHz
f_{SW}	Switching frequency	R_T = 200 kΩ	450	581	720	kHz
	Switching Frequency Range using CLK mode		300		2200	kHz
	Minimum CLK input pulse width			40		ns
	RT/CLK high threshold			1.9	2.2	V
	RT/CLK low threshold		0.5	0.7		V
	RT/CLK falling edge to PH rising edge delay	Measured at 500 kHz with RT resistor in series		60		ns
	PLL lock in time	Measured at 500 kHz		100		µs
SLOW START AND TRACKING (SS/TR)						
	Charge current	$V_{SS/TR}$ = 0.4 V		2		µA
	SS/TR-to-VSENSE matching	$V_{SS/TR}$ = 0.4 V		45		mV
	SS/TR-to-reference crossover	98% nominal		1.15		V
	SS/TR discharge current (overload)	VSENSE = 0 V, V(SS/TR) = 0.4 V		382		µA
	SS/TR discharge voltage	VSENSE = 0 V		54		mV
POWER GOOD (PWRGD PIN)						
V_{VSENSE}	VSENSE threshold	VSENSE falling		92%		
		VSENSE rising		94%		
		VSENSE rising		109%		
		VSENSE falling		107%		
	Hysteresis	VSENSE falling		2%		
	Output high leakage	VSENSE = VREF, V(PWRGD) = 5.5 V, 25°C		10		nA
	On resistance	I(PWRGD) = 3 mA, VSENSE < 0.79 V		50		Ω
	Minimum VIN for defined output	V(PWRGD) < 0.5 V, II(PWRGD) = 100 µA		0.95	1.5	V

Copyright © 2010, Texas Instruments Incorporated

DEVICE INFORMATION

PIN CONFIGURATION

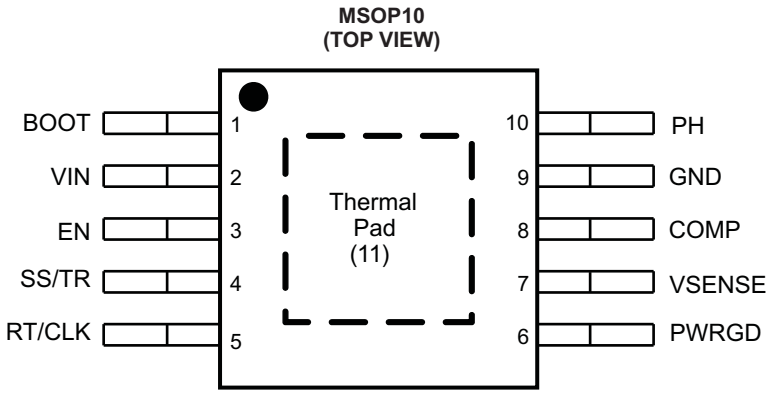

PIN FUNCTIONS

PIN		I/O	DESCRIPTION
NAME	NO.		
BOOT	1	O	A bootstrap capacitor is required between BOOT and PH. If the voltage on this capacitor is below the minimum required by the output device, the output is forced to switch off until the capacitor is refreshed.
COMP	8	O	Error amplifier output, and input to the output switch current comparator. Connect frequency compensation components to this pin.
EN	3	I	Enable pin, internal pull-up current source. Pull below 1.2V to disable. Float to enable. Adjust the input undervoltage lockout with two resistors.
GND	9	–	Ground
PH	10	I	The source of the internal high-side power MOSFET.
POWERPAD	11	–	GND pin must be electrically connected to the exposed pad on the printed circuit board for proper operation.
PWRGD	6	O	An open drain output, asserts low if output voltage is low due to thermal shutdown, dropout, over-voltage or EN shut down.
RT/CLK	5	I	Resistor Timing and External Clock. An internal amplifier holds this pin at a fixed voltage when using an external resistor to ground to set the switching frequency. If the pin is pulled above the PLL upper threshold, a mode change occurs and the pin becomes a synchronization input. The internal amplifier is disabled and the pin is a high impedance clock input to the internal PLL. If clocking edges stop, the internal amplifier is re-enabled and the mode returns to a resistor set function.
SS/TR	4	I	Slow-start and Tracking. An external capacitor connected to this pin sets the output rise time. Since the voltage on this pin overrides the internal reference, it can be used for tracking and sequencing.
VIN	2	I	Input supply voltage, 3.5 V to 42 V.
VSENSE	7	I	Inverting node of the transconductance (gm) error amplifier.

Copyright © 2010, Texas Instruments Incorporated

FUNCTIONAL BLOCK DIAGRAM

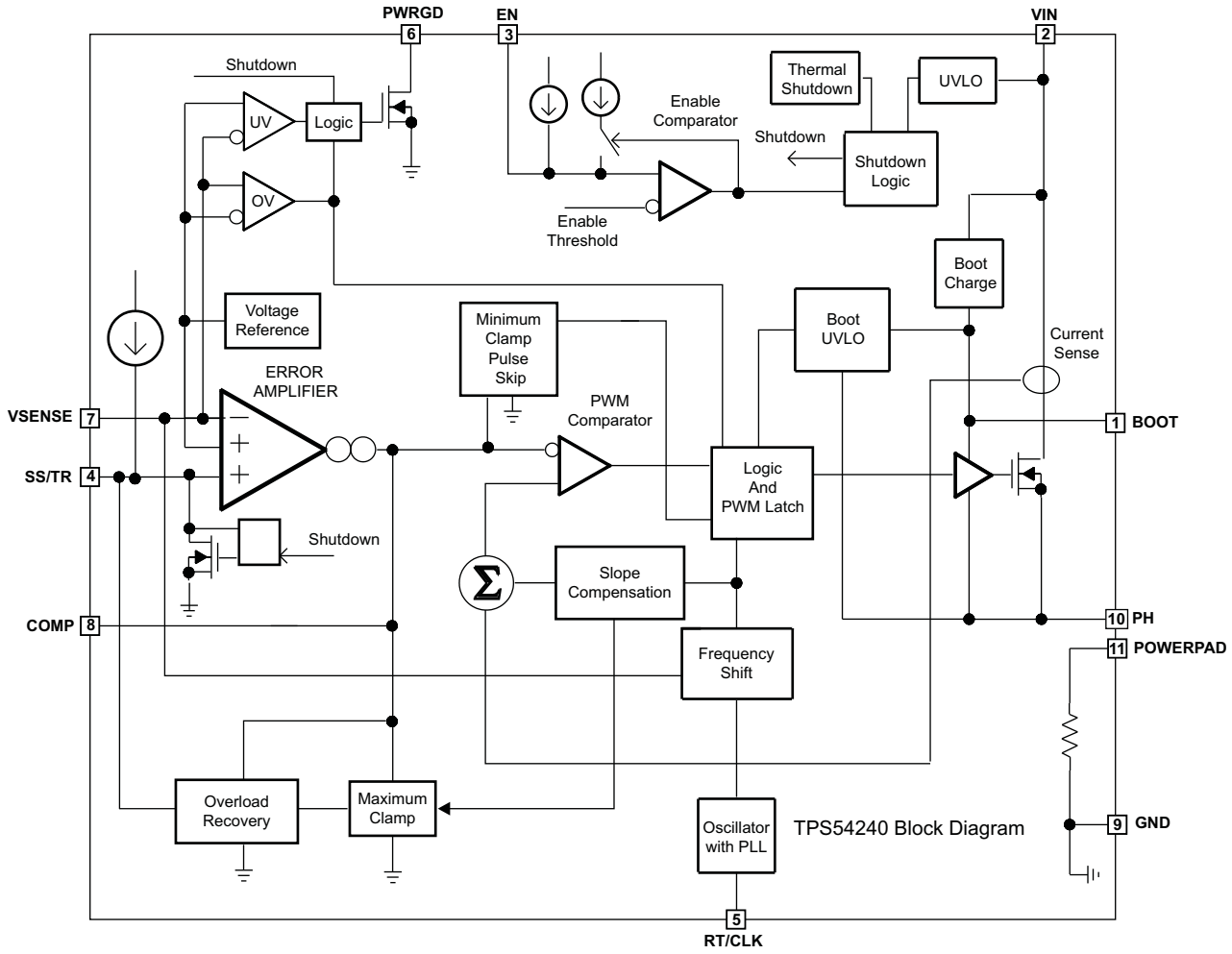

Copyright © 2010, Texas Instruments Incorporated

TYPICAL CHARACTERISTICS

ON RESISTANCE vs JUNCTION TEMPERATURE

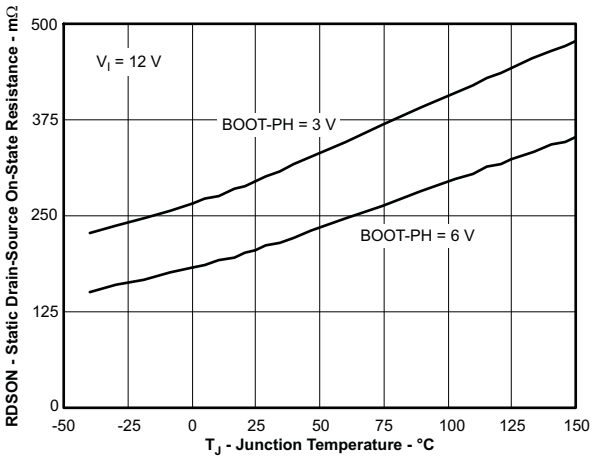

Figure 1.

VOLTAGE REFERENCE vs JUNCTION TEMPERATURE

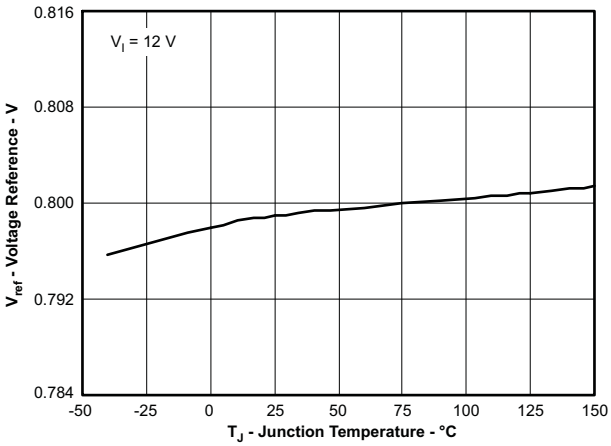

Figure 2.

SWITCH CURRENT LIMIT vs JUNCTION TEMPERATURE

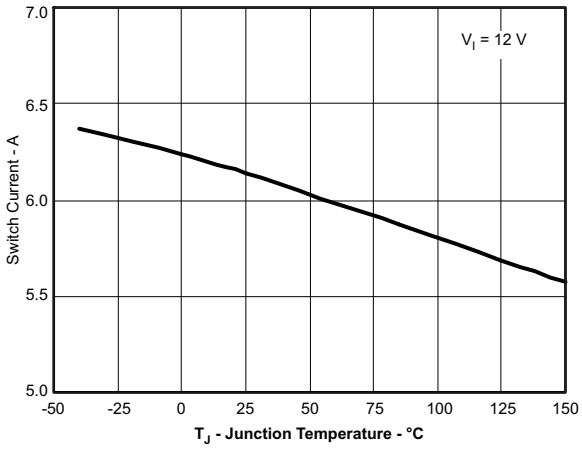

Figure 3.

SWITCHING FREQUENCY vs JUNCTION TEMPERATURE

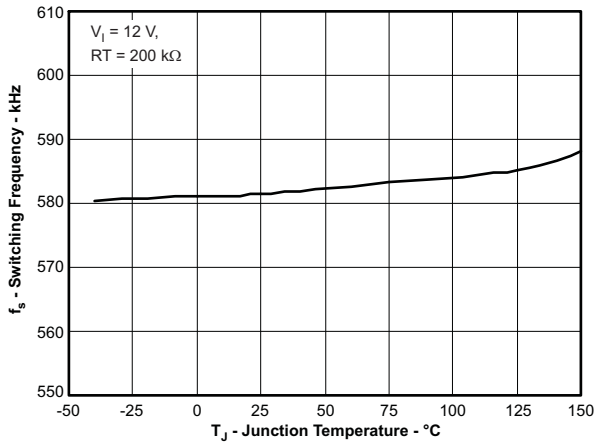

Figure 4.

SWITCHING FREQUENCY vs RT/CLK RESISTANCE HIGH FREQUENCY RANGE

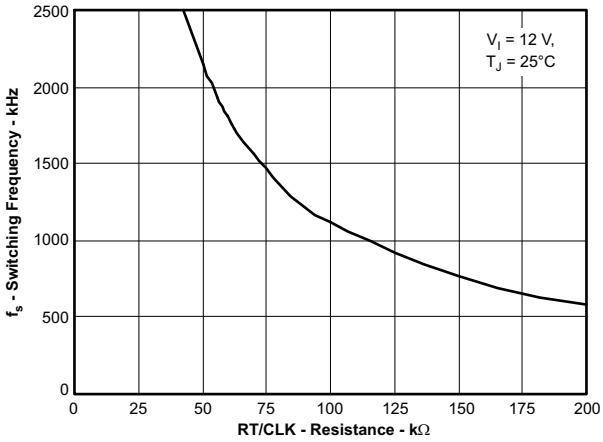

Figure 5.

SWITCHING FREQUENCY vs RT/CLK RESISTANCE LOW FREQUENCY RANGE

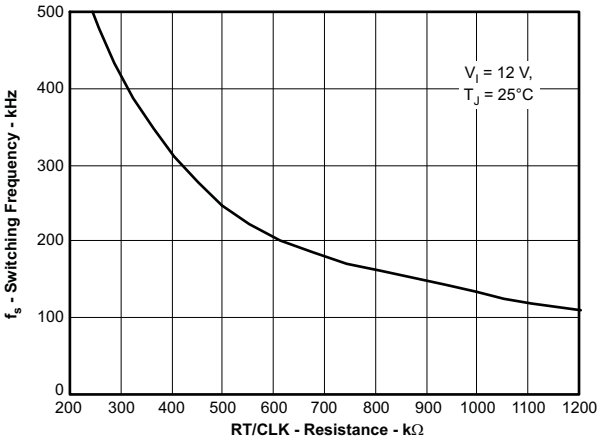

Figure 6.

Copyright © 2010, Texas Instruments Incorporated

TYPICAL CHARACTERISTICS (continued)

EA TRANSCONDUCTANCE DURING SLOW START vs JUNCTION TEMPERATURE

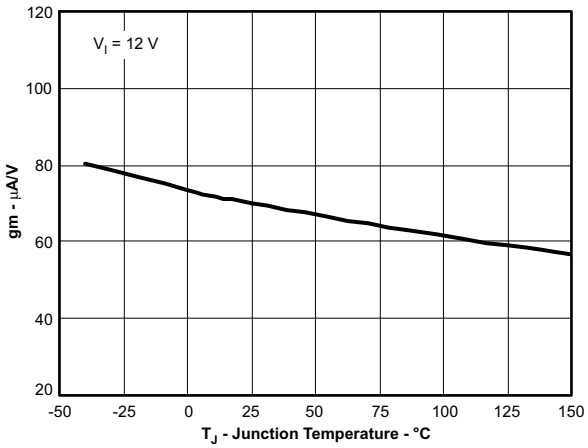

Figure 7.

EA TRANSCONDUCTANCE vs JUNCTION TEMPERATURE

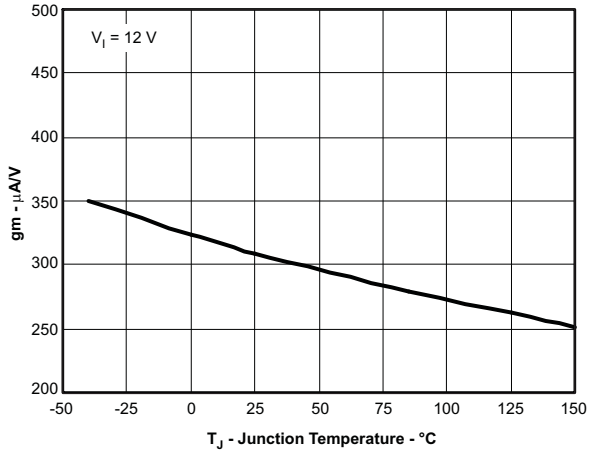

Figure 8.

EN PIN VOLTAGE vs JUNCTION TEMPERATURE

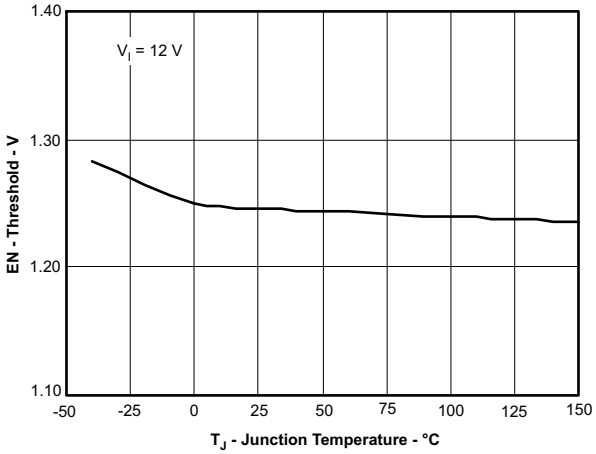

Figure 9.

EN PIN CURRENT vs JUNCTION TEMPERATURE

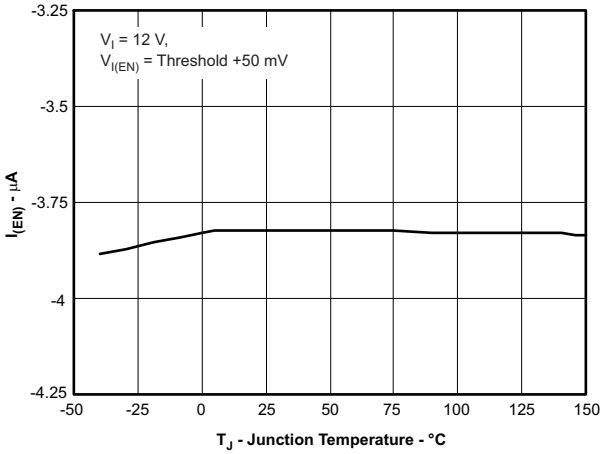

Figure 10.

EN PIN CURRENT vs JUNCTION TEMPERATURE

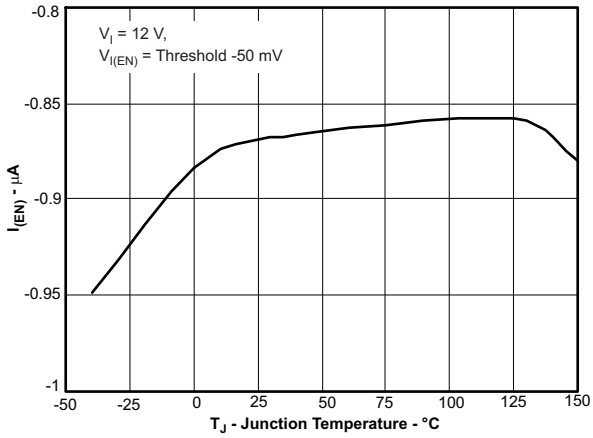

Figure 11.

SS/TR CHARGE CURRENT vs JUNCTION TEMPERATURE

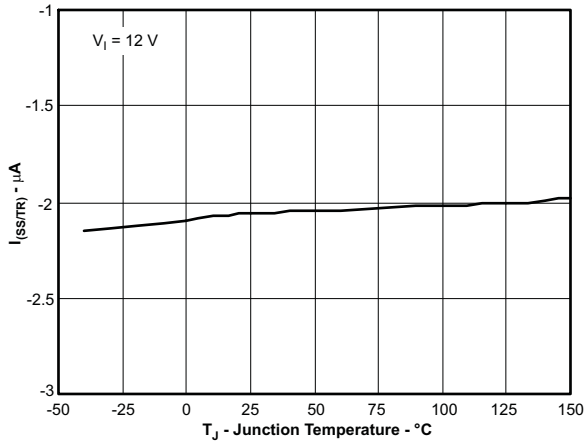

Figure 12.

Copyright © 2010, Texas Instruments Incorporated

TYPICAL CHARACTERISTICS (continued)

SS/TR DISCHARGE CURRENT vs JUNCTION TEMPERATURE

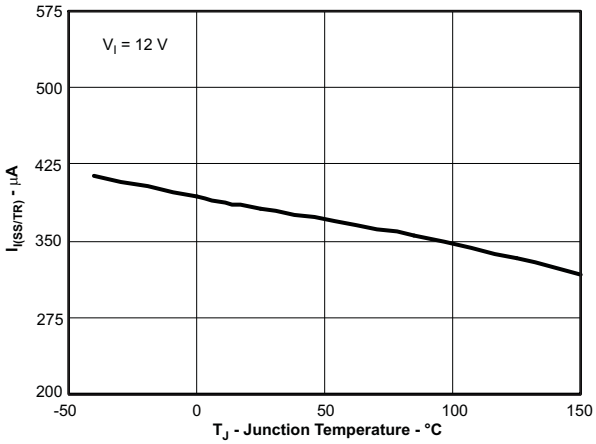

Figure 13.

SWITCHING FREQUENCY vs VSENSE

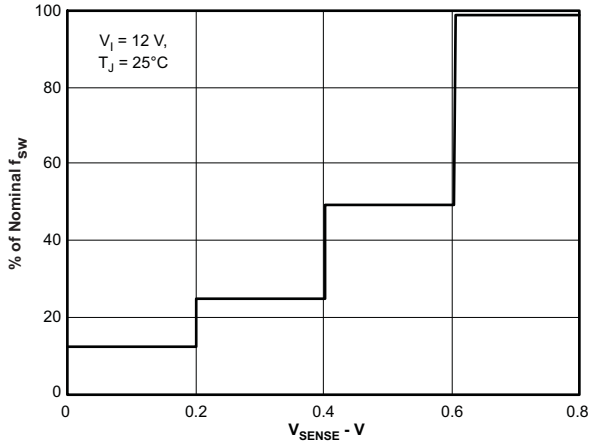

Figure 14.

SHUTDOWN SUPPLY CURRENT vs JUNCTION TEMPERATURE

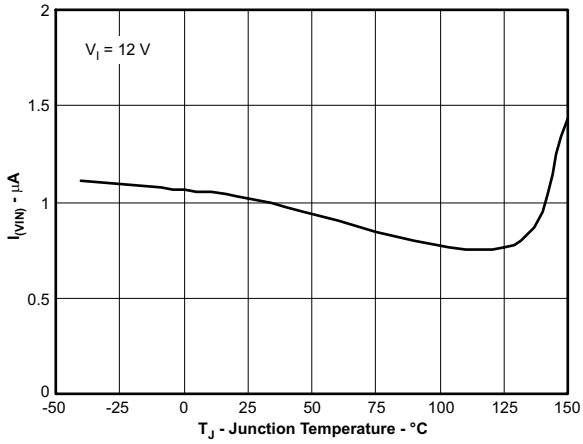

Figure 15.

SHUTDOWN SUPPLY CURRENT vs INPUT VOLTAGE (V_{in})

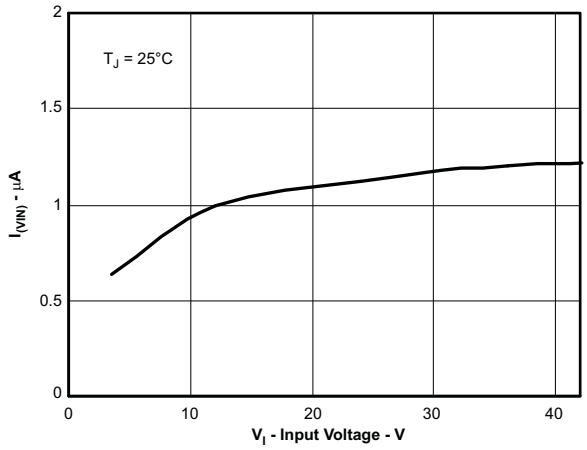

Figure 16.

VIN SUPPLY CURRENT vs JUNCTION TEMPERATURE

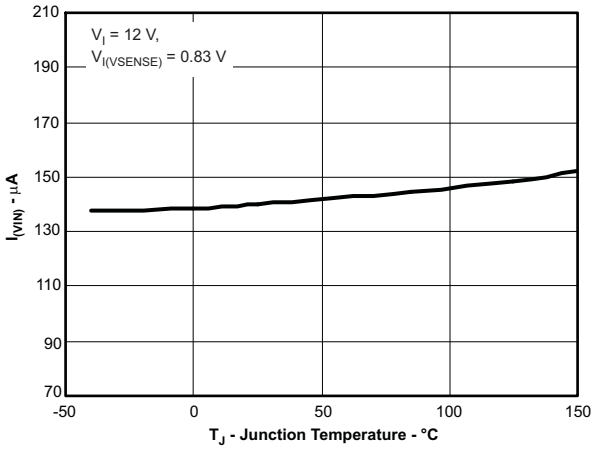

Figure 17.

VIN SUPPLY CURRENT vs INPUT VOLTAGE

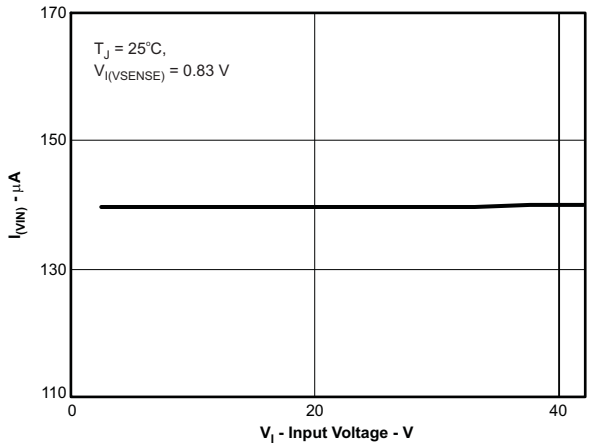

Figure 18.

Copyright © 2010, Texas Instruments Incorporated

TYPICAL CHARACTERISTICS (continued)

PWRGD ON RESISTANCE vs JUNCTION TEMPERATURE

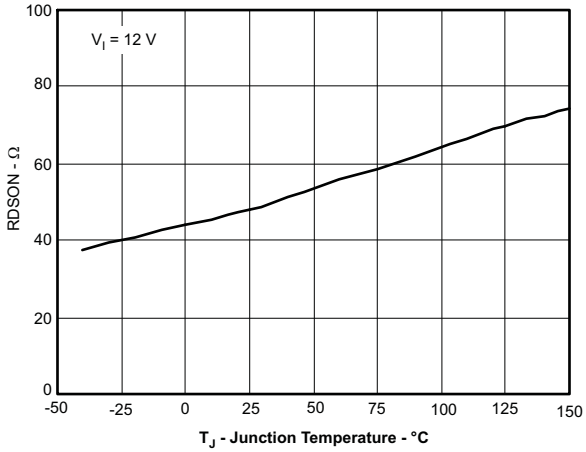

Figure 19.

PWRGD THRESHOLD vs JUNCTION TEMPERATURE

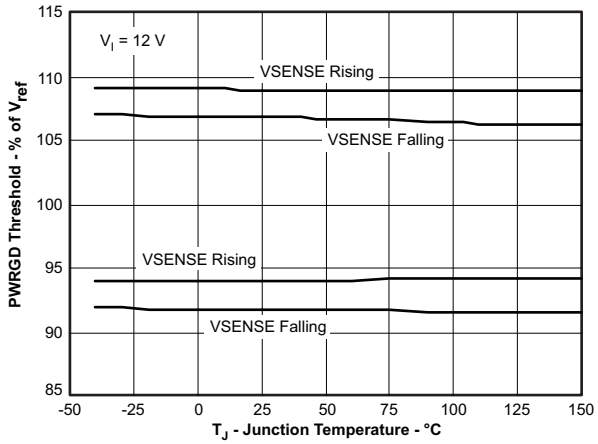

Figure 20.

BOOT-PH UVLO vs JUNCTION TEMPERATURE

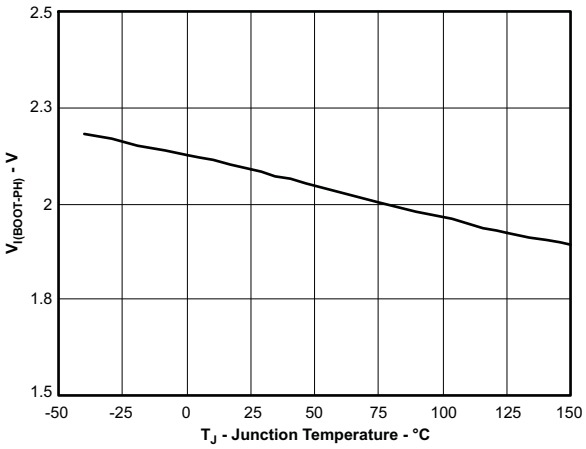

Figure 21.

INPUT VOLTAGE (UVLO) vs JUNCTION TEMPERATURE

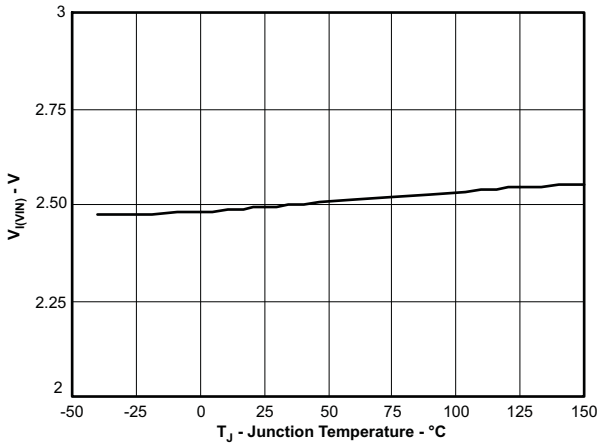

Figure 22.

SS/TR TO VSENSE OFFSET vs VSENSE

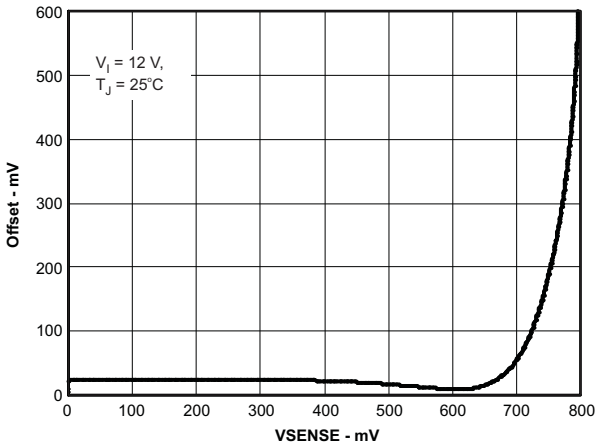

Figure 23.

SS/TR TO VSENSE OFFSET vs TEMPERATURE

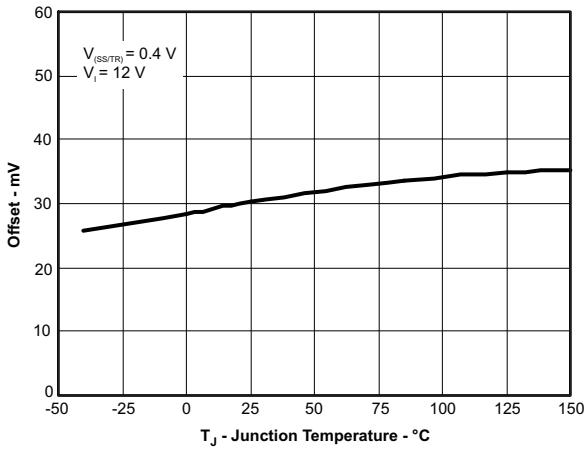

Figure 24.

Copyright © 2010, Texas Instruments Incorporated

OVERVIEW

The TPS54240 device is a 42-V, 2.5-A, step-down (buck) regulator with an integrated high side n-channel MOSFET. To improve performance during line and load transients the device implements a constant frequency, current mode control which reduces output capacitance and simplifies external frequency compensation design. The wide switching frequency of 100kHz to 2500kHz allows for efficiency and size optimization when selecting the output filter components. The switching frequency is adjusted using a resistor to ground on the RT/CLK pin. The device has an internal phase lock loop (PLL) on the RT/CLK pin that is used to synchronize the power switch turn on to a falling edge of an external system clock.

The TPS54240 has a default start up voltage of approximately 2.5V. The EN pin has an internal pull-up current source that can be used to adjust the input voltage under voltage lockout (UVLO) threshold with two external resistors. In addition, the pull up current provides a default condition. When the EN pin is floating the device will operate. The operating current is 138μA when not switching and under no load. When the device is disabled, the supply current is 1.3μA.

The integrated 200mΩ high side MOSFET allows for high efficiency power supply designs capable of delivering 2.5 amperes of continuous current to a load. The TPS54240 reduces the external component count by integrating the boot recharge diode. The bias voltage for the integrated high side MOSFET is supplied by a capacitor on the BOOT to PH pin. The boot capacitor voltage is monitored by an UVLO circuit and will turn the high side MOSFET off when the boot voltage falls below a preset threshold. The TPS54240 can operate at high duty cycles because of the boot UVLO. The output voltage can be stepped down to as low as the 0.8V reference.

The TPS54240 has a power good comparator (PWRGD) which asserts when the regulated output voltage is less than 92% or greater than 109% of the nominal output voltage. The PWRGD pin is an open drain output which deasserts when the VSENSE pin voltage is between 94% and 107% of the nominal output voltage allowing the pin to transition high when a pull-up resistor is used.

The TPS54240 minimizes excessive output overvoltage (OV) transients by taking advantage of the OV power good comparator. When the OV comparator is activated, the high side MOSFET is turned off and masked from turning on until the output voltage is lower than 107%.

The SS/TR (slow start/tracking) pin is used to minimize inrush currents or provide power supply sequencing during power up. A small value capacitor should be coupled to the pin to adjust the slow start time. A resistor divider can be coupled to the pin for critical power supply sequencing requirements. The SS/TR pin is discharged before the output powers up. This discharging ensures a repeatable restart after an over-temperature fault, UVLO fault or a disabled condition.

The TPS54240, also, discharges the slow start capacitor during overload conditions with an overload recovery circuit. The overload recovery circuit will slow start the output from the fault voltage to the nominal regulation voltage once a fault condition is removed. A frequency foldback circuit reduces the switching frequency during startup and overcurrent fault conditions to help control the inductor current.

Copyright © 2010, Texas Instruments Incorporated

DETAILED DESCRIPTION

Fixed Frequency PWM Control

The TPS54240 uses an adjustable fixed frequency, peak current mode control. The output voltage is compared through external resistors on the VSENSE pin to an internal voltage reference by an error amplifier which drives the COMP pin. An internal oscillator initiates the turn on of the high side power switch. The error amplifier output is compared to the high side power switch current. When the power switch current reaches the level set by the COMP voltage, the power switch is turned off. The COMP pin voltage will increase and decrease as the output current increases and decreases. The device implements a current limit by clamping the COMP pin voltage to a maximum level. The Eco-Mode™ is implemented with a minimum clamp on the COMP pin.

Slope Compensation Output Current

The TPS54240 adds a compensating ramp to the switch current signal. This slope compensation prevents sub-harmonic oscillations. The available peak inductor current remains constant over the full duty cycle range.

Pulse Skip Eco-Mode

The TPS54240 operates in a pulse skip Eco mode at light load currents to improve efficiency by reducing switching and gate drive losses. The TPS54240 is designed so that if the output voltage is within regulation and the peak switch current at the end of any switching cycle is below the pulse skipping current threshold, the device enters Eco mode. This current threshold is the current level corresponding to a nominal COMP voltage or 500mV.

When in Eco-mode, the COMP pin voltage is clamped at 500mV and the high side MOSFET is inhibited. Further decreases in load current or in output voltage can not drive the COMP pin below this clamp voltage level.

Since the device is not switching, the output voltage begins to decay. As the voltage control loop compensates for the falling output voltage, the COMP pin voltage begins to rise. At this time, the high side MOSFET is enabled and a switching pulse initiates on the next switching cycle. The peak current is set by the COMP pin voltage. The output voltage re-charges the regulated value, then the peak switch current starts to decrease, and eventually falls below the Eco mode threshold at which time the device again enters Eco mode.

For Eco mode operation, the TPS54240 senses peak current, not average or load current, so the load current where the device enters Eco mode is dependent on the output inductor value. For example, the circuit in Figure 49 enters Eco mode at about 5 mA of output current. When the load current is low and the output voltage is within regulation, the device enters a sleep mode and draws only 138μA input quiescent current. The internal PLL remains operating when in sleep mode. When operating at light load currents in the pulse skip mode, the switching transitions occur synchronously with the external clock signal.

Low Dropout Operation and Bootstrap Voltage (BOOT)

The TPS54240 has an integrated boot regulator, and requires a small ceramic capacitor between the BOOT and PH pins to provide the gate drive voltage for the high side MOSFET. The BOOT capacitor is refreshed when the high side MOSFET is off and the low side diode conducts. The value of this ceramic capacitor should be 0.1μF. A ceramic capacitor with an X7R or X5R grade dielectric with a voltage rating of 10V or higher is recommended because of the stable characteristics overtemperature and voltage.

To improve drop out, the TPS54240 is designed to operate at 100% duty cycle as long as the BOOT to PH pin voltage is greater than 2.1V. When the voltage from BOOT to PH drops below 2.1V, the high side MOSFET is turned off using an UVLO circuit which allows the low side diode to conduct and refresh the charge on the BOOT capacitor. Since the supply current sourced from the BOOT capacitor is low, the high side MOSFET can remain on for more switching cycles than are required to refresh the capacitor, thus the effective duty cycle of the switching regulator is high.

The effective duty cycle during dropout of the regulator is mainly influenced by the voltage drops across the power MOSFET, inductor resistance, low side diode and printed circuit board resistance. During operating conditions in which the input voltage drops and the regulator is operating in continuous conduction mode, the high side MOSFET can remain on for 100% of the duty cycle to maintain output regulation, until the BOOT to PH voltage falls below 2.1V.

 Copyright © 2010, Texas Instruments Incorporated

DETAILED DESCRIPTION (continued)

Attention must be taken in maximum duty cycle applications which experience extended time periods with light loads or no load. When the voltage across the BOOT capacitor falls below the 2.1V UVLO threshold, the high side MOSFET is turned off, but there may not be enough inductor current to pull the PH pin down to recharge the BOOT capacitor. The high side MOSFET of the regulator stops switching because the voltage across the BOOT capacitor is less than 2.1V. The output capacitor then decays until the difference in the input voltage and output voltage is greater than 2.1V, at which point the BOOT UVLO threshold is exceeded, and the device starts switching again until the desired output voltage is reached. This operating condition persists until the input voltage and/or the load current increases. It is recommended to adjust the VIN stop voltage greater than the BOOT UVLO trigger condition at the minimum load of the application using the adjustable VIN UVLO feature with resistors on the EN pin.

The start and stop voltages for typical 3.3V and 5V output applications are shown in Figure 25 and Figure 26. The voltages are plotted versus load current. The start voltage is defined as the input voltage needed to regulate the output within 1%. The stop voltage is defined as the input voltage at which the output drops by 5% or stops switching.

During high duty cycle conditions, the inductor current ripple increases while the BOOT capacitor is being recharged resulting in an increase in ripple voltage on the output. This is due to the recharge time of the boot capacitor being longer than the typical high side off time when switching occurs every cycle.

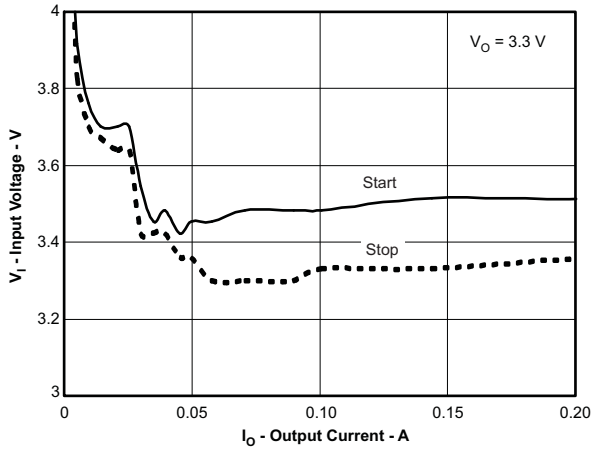

Figure 25. 3.3V Start/Stop Voltage

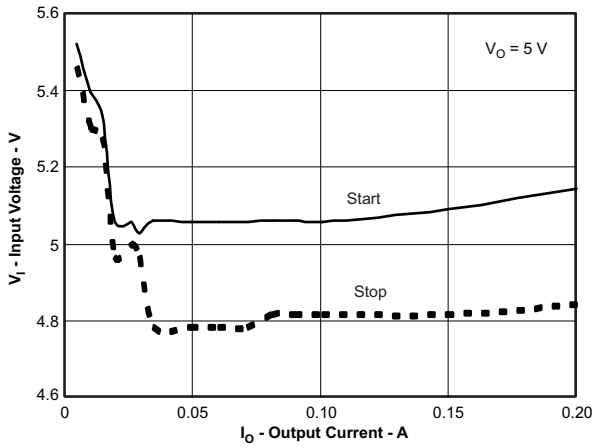

Figure 26. 5.0V Start/Stop Voltage

Error Amplifier

The TPS54240 has a transconductance amplifier for the error amplifier. The error amplifier compares the VSENSE voltage to the lower of the SS/TR pin voltage or the internal 0.8V voltage reference. The transconductance (gm) of the error amplifier is 310μA/V during normal operation. During the slow start operation, the transconductance is a fraction of the normal operating gm. When the voltage of the VSENSE pin is below 0.8V and the device is regulating using the SS/TR voltage, the gm is 70μA/V.

The frequency compensation components (capacitor, series resistor and capacitor) are added to the COMP pin to ground.

Voltage Reference

The voltage reference system produces a precise ±2% voltage reference over temperature by scaling the output of a temperature stable bandgap circuit.

Adjusting the Output Voltage

The output voltage is set with a resistor divider from the output node to the VSENSE pin. It is recommended to use 1% tolerance or better divider resistors. Start with a 10 kΩ for the R2 resistor and use the Equation 1 to calculate R1. To improve efficiency at light loads consider using larger value resistors. If the values are too high the regulator will be more susceptible to noise and voltage errors from the VSENSE input current will be noticeable.

Copyright © 2010, Texas Instruments Incorporated

DETAILED DESCRIPTION (continued)

$$R1 = R2 \times \left(\frac{Vout - 0.8V}{0.8\ V}\right) \quad (1)$$

Enable and Adjusting Undervoltage Lockout

The TPS54240 is disabled when the VIN pin voltage falls below 2.5 V. If an application requires a higher undervoltage lockout (UVLO), use the EN pin as shown in Figure 27 to adjust the input voltage UVLO by using the two external resistors. Though it is not necessary to use the UVLO adjust registers, for operation it is highly recommended to provide consistent power up behavior. The EN pin has an internal pull-up current source, I1, of 0.9μA that provides the default condition of the TPS54240 operating when the EN pin floats. Once the EN pin voltage exceeds 1.25V, an additional 2.9μA of hysteresis, Ihys, is added. This additional current facilitates input voltage hysteresis. Use Equation 2 to set the external hysteresis for the input voltage. Use Equation 3 to set the input start voltage.

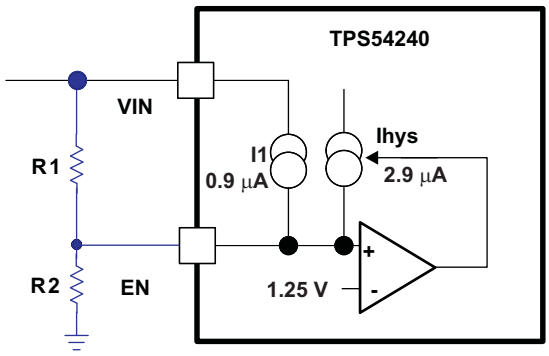

Figure 27. Adjustable Undervoltage Lockout (UVLO)

$$R1 = \frac{V_{START} - V_{STOP}}{I_{HYS}} \quad (2)$$

$$R2 = \frac{V_{ENA}}{\frac{V_{START} - V_{ENA}}{R1} + I_1} \quad (3)$$

Another technique to add input voltage hysteresis is shown in Figure 28. This method may be used, if the resistance values are high from the previous method and a wider voltage hysteresis is needed. The resistor R3 sources additional hysteresis current into the EN pin.

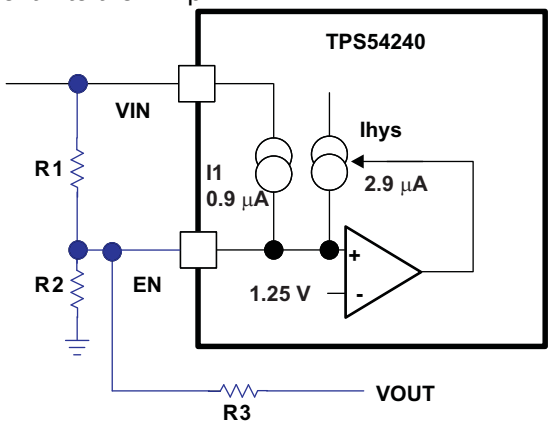

Figure 28. Adding Additional Hysteresis

Copyright © 2010, Texas Instruments Incorporated

DETAILED DESCRIPTION (continued)

$$R1 = \frac{V_{START} - V_{STOP}}{I_{HYS} + \frac{V_{OUT}}{R3}} \tag{4}$$

$$R2 = \frac{V_{ENA}}{\frac{V_{START} - V_{ENA}}{R1} + I_1 - \frac{V_{ENA}}{R3}} \tag{5}$$

Slow Start/Tracking Pin (SS/TR)

The TPS54240 effectively uses the lower voltage of the internal voltage reference or the SS/TR pin voltage as the power-supply's reference voltage and regulates the output accordingly. A capacitor on the SS/TR pin to ground implements a slow start time. The TPS54240 has an internal pull-up current source of 2μA that charges the external slow start capacitor. The calculations for the slow start time (10% to 90%) are shown in Equation 6. The voltage reference (V_{REF}) is 0.8 V and the slow start current (I_{SS}) is 2μA. The slow start capacitor should remain lower than 0.47μF and greater than 0.47nF.

$$Css(nF) = \frac{Tss(ms) \times Iss(\mu A)}{Vref\ (V) \times 0.8} \tag{6}$$

At power up, the TPS54240 will not start switching until the slow start pin is discharged to less than 40 mV to ensure a proper power up, see Figure 29.

Also, during normal operation, the TPS54240 will stop switching and the SS/TR must be discharged to 40 mV, when the VIN UVLO is exceeded, EN pin pulled below 1.25V, or a thermal shutdown event occurs.

The VSENSE voltage will follow the SS/TR pin voltage with a 45mV offset up to 85% of the internal voltage reference. When the SS/TR voltage is greater than 85% on the internal reference voltage the offset increases as the effective system reference transitions from the SS/TR voltage to the internal voltage reference (see Figure 23). The SS/TR voltage will ramp linearly until clamped at 1.7V.

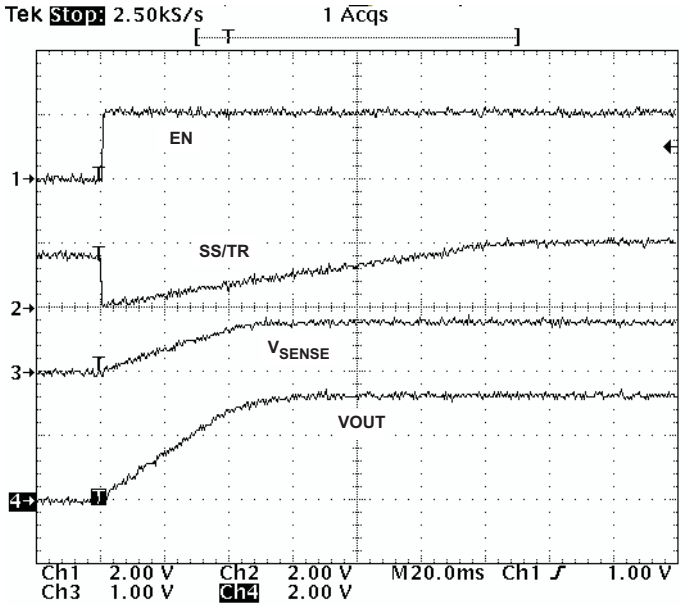

Figure 29. Operation of SS/TR Pin when Starting

DETAILED DESCRIPTION (continued)

Overload Recovery Circuit

The TPS54240 has an overload recovery (OLR) circuit. The OLR circuit will slow start the output from the overload voltage to the nominal regulation voltage once the fault condition is removed. The OLR circuit will discharge the SS/TR pin to a voltage slightly greater than the VSENSE pin voltage using an internal pull down of 382µA when the error amplifier is changed to a high voltage from a fault condition. When the fault condition is removed, the output will slow start from the fault voltage to nominal output voltage.

Sequencing

Many of the common power supply sequencing methods can be implemented using the SS/TR, EN and PWRGD pins. The sequential method can be implemented using an open drain output of a power on reset pin of another device. The sequential method is illustrated in Figure 30 using two TPS54240 devices. The power good is coupled to the EN pin on the TPS54240 which will enable the second power supply once the primary supply reaches regulation. If needed, a 1nF ceramic capacitor on the EN pin of the second power supply will provide a 1ms start up delay. Figure 31 shows the results of Figure 30.

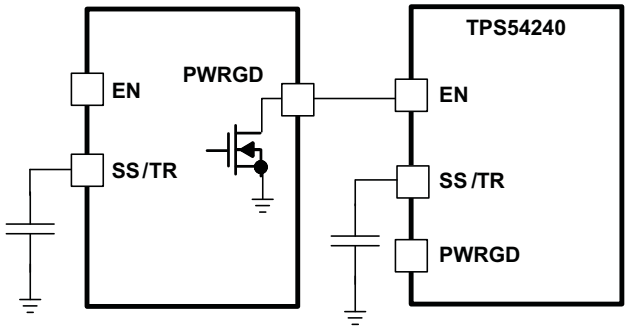

Figure 30. Schematic for Sequential Start-Up Sequence

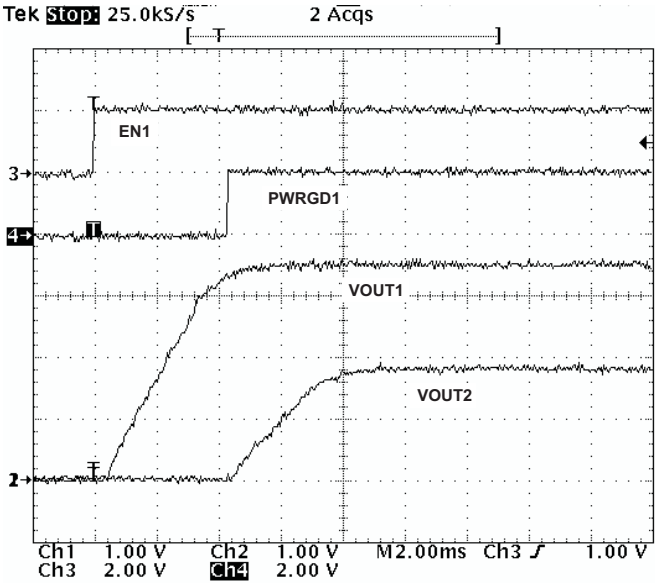

Figure 31. Sequential Startup using EN and PWRGD

Copyright © 2010, Texas Instruments Incorporated

DETAILED DESCRIPTION (continued)

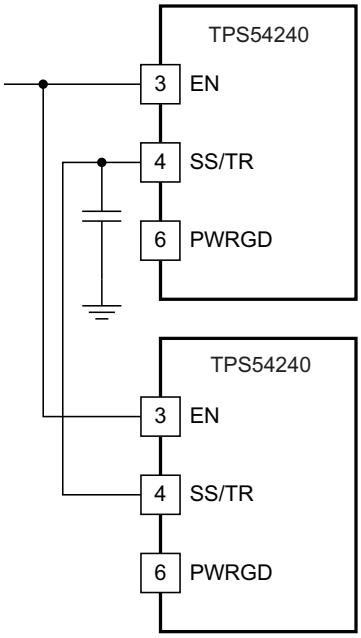

Figure 32. Schematic for Ratiometric Start-Up Sequence

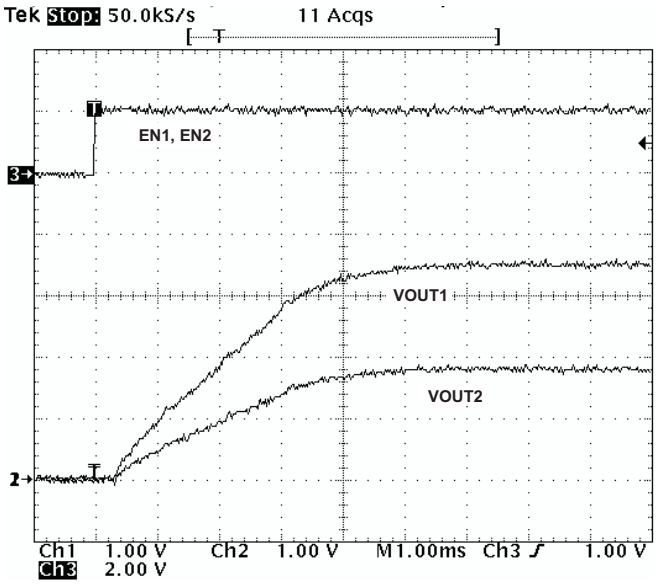

Figure 33. Ratio-Metric Startup using Coupled SS/TR pins

Figure 32 shows a method for ratio-metric start up sequence by connecting the SS/TR pins together. The regulator outputs will ramp up and reach regulation at the same time. When calculating the slow start time the pull up current source must be doubled in Equation 6. Figure 33 shows the results of Figure 32.

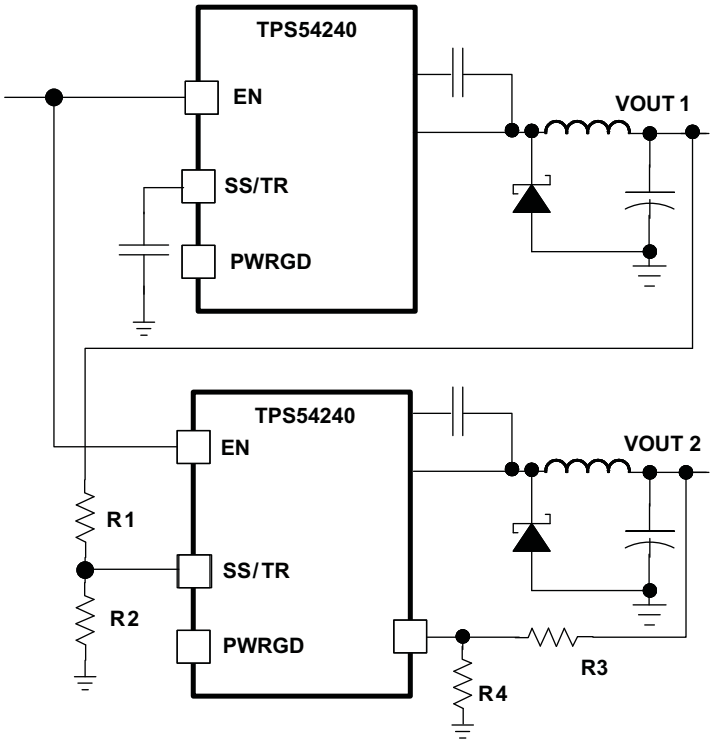

Figure 34. Schematic for Ratiometric and Simultaneous Start-Up Sequence

DETAILED DESCRIPTION (continued)

Ratio-metric and simultaneous power supply sequencing can be implemented by connecting the resistor network of R1 and R2 shown in Figure 34 to the output of the power supply that needs to be tracked or another voltage reference source. Using Equation 7 and Equation 8, the tracking resistors can be calculated to initiate the Vout2 slightly before, after or at the same time as Vout1. Equation 9 is the voltage difference between Vout1 and Vout2 at the 95% of nominal output regulation.

The deltaV variable is zero volts for simultaneous sequencing. To minimize the effect of the inherent SS/TR to VSENSE offset (Vssoffset) in the slow start circuit and the offset created by the pullup current source (Iss) and tracking resistors, the Vssoffset and Iss are included as variables in the equations.

To design a ratio-metric start up in which the Vout2 voltage is slightly greater than the Vout1 voltage when Vout2 reaches regulation, use a negative number in Equation 7 through Equation 9 for deltaV. Equation 9 will result in a positive number for applications which the Vout2 is slightly lower than Vout1 when Vout2 regulation is achieved.

Since the SS/TR pin must be pulled below 40mV before starting after an EN, UVLO or thermal shutdown fault, careful selection of the tracking resistors is needed to ensure the device will restart after a fault. Make sure the calculated R1 value from Equation 7 is greater than the value calculated in Equation 10 to ensure the device can recover from a fault.

As the SS/TR voltage becomes more than 85% of the nominal reference voltage the Vssoffset becomes larger as the slow start circuits gradually handoff the regulation reference to the internal voltage reference. The SS/TR pin voltage needs to be greater than 1.3V for a complete handoff to the internal voltage reference as shown in Figure 23.

$$R1 = \frac{Vout2 + deltaV}{VREF} \times \frac{Vssoffset}{Iss} \tag{7}$$

$$R2 = \frac{VREF \times R1}{Vout2 + deltaV - VREF} \tag{8}$$

$$deltaV = Vout1 - Vout2 \tag{9}$$

$$R1 > 2800 \times Vout1 - 180 \times deltaV \tag{10}$$

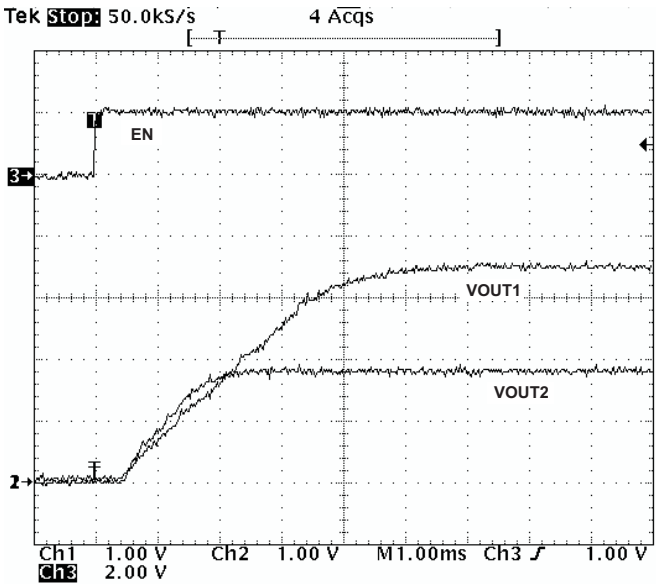

Figure 35. Ratio-metric Startup with Tracking Resistors

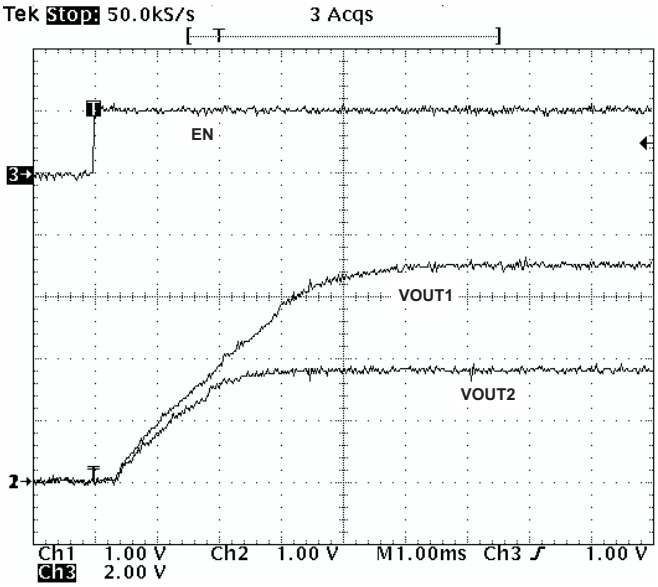

Figure 36. Ratiometric Startup with Tracking Resistors

Copyright © 2010, Texas Instruments Incorporated

DETAILED DESCRIPTION (continued)

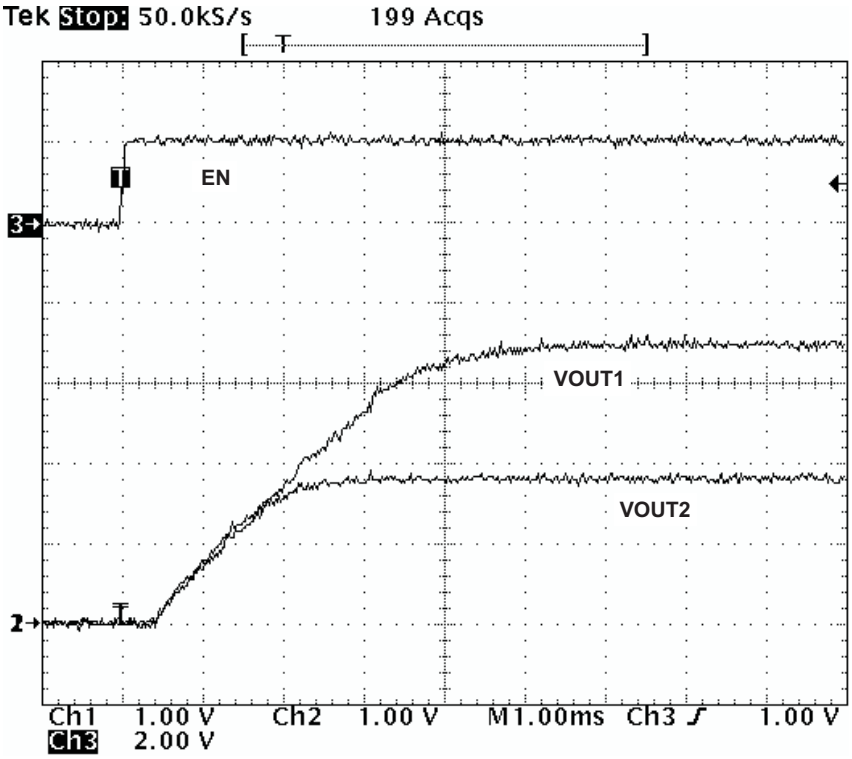

Figure 37. Simultaneous Startup With Tracking Resistor

DETAILED DESCRIPTION (continued)

Constant Switching Frequency and Timing Resistor (RT/CLK Pin)

The switching frequency of the TPS54240 is adjustable over a wide range from approximately 100kHz to 2500kHz by placing a resistor on the RT/CLK pin. The RT/CLK pin voltage is typically 0.5V and must have a resistor to ground to set the switching frequency. To determine the timing resistance for a given switching frequency, use Equation 11 or the curves in Figure 38 or Figure 39. To reduce the solution size one would typically set the switching frequency as high as possible, but tradeoffs of the supply efficiency, maximum input voltage and minimum controllable on time should be considered.

The minimum controllable on time is typically 135ns and limits the maximum operating input voltage.

The maximum switching frequency is also limited by the frequency shift circuit. More discussion on the details of the maximum switching frequency is located below.

$$\text{RT (kOhm)} = \frac{206033}{f\text{sw (kHz)}^{1.0888}} \tag{11}$$

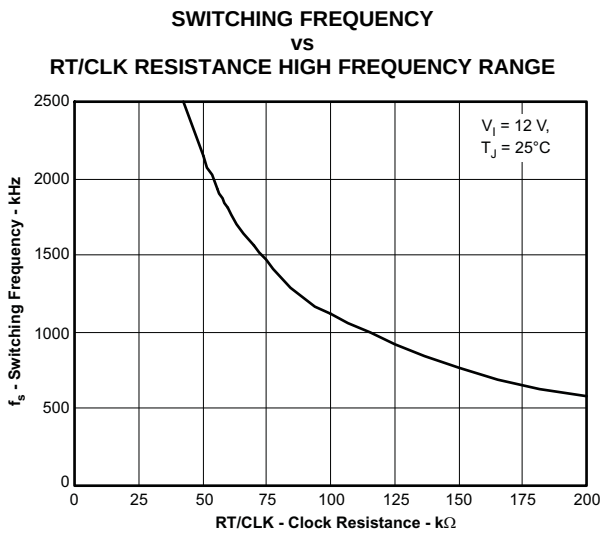

Figure 38. High Range RT

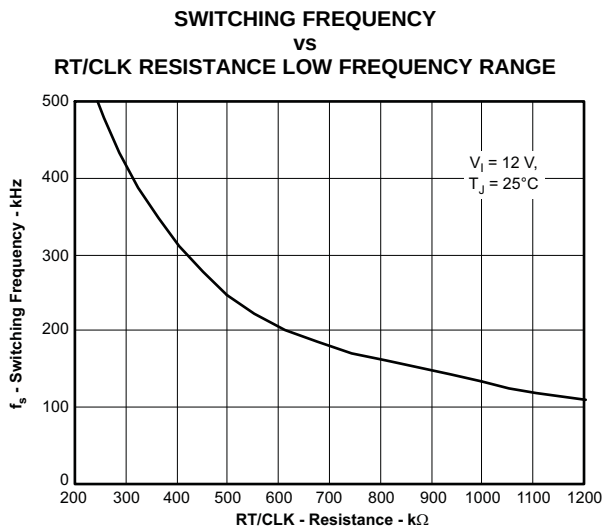

Figure 39. Low Range RT

Overcurrent Protection and Frequency Shift

The TPS54240 implements current mode control which uses the COMP pin voltage to turn off the high side MOSFET on a cycle by cycle basis. Each cycle the switch current and COMP pin voltage are compared, when the peak switch current intersects the COMP voltage, the high side switch is turned off. During overcurrent conditions that pull the output voltage low, the error amplifier will respond by driving the COMP pin high, increasing the switch current. The error amplifier output is clamped internally, which functions as a switch current limit.

To increase the maximum operating switching frequency at high input voltages the TPS54240 implements a frequency shift. The switching frequency is divided by 8, 4, 2, and 1 as the voltage ramps from 0 to 0.8 volts on VSENSE pin.

The device implements a digital frequency shift to enable synchronizing to an external clock during normal startup and fault conditions. Since the device can only divide the switching frequency by 8, there is a maximum input voltage limit in which the device operates and still have frequency shift protection.

During short-circuit events (particularly with high input voltage applications), the control loop has a finite minimum controllable on time and the output has a low voltage. During the switch on time, the inductor current ramps to the peak current limit because of the high input voltage and minimum on time. During the switch off time, the inductor would normally not have enough off time and output voltage for the inductor to ramp down by the ramp up amount. The frequency shift effectively increases the off time allowing the current to ramp down.

Copyright © 2010, Texas Instruments Incorporated

DETAILED DESCRIPTION (continued)

Selecting the Switching Frequency

The switching frequency that is selected should be the lower value of the two equations, Equation 12 and Equation 13. Equation 12 is the maximum switching frequency limitation set by the minimum controllable on time. Setting the switching frequency above this value will cause the regulator to skip switching pulses.

Equation 13 is the maximum switching frequency limit set by the frequency shift protection. To have adequate output short circuit protection at high input voltages, the switching frequency should be set to be less than the fsw(maxshift) frequency. In Equation 13, to calculate the maximum switching frequency one must take into account that the output voltage decreases from the nominal voltage to 0 volts, the fdiv integer increases from 1 to 8 corresponding to the frequency shift.

In Figure 40, the solid line illustrates a typical safe operating area regarding frequency shift and assumes the output voltage is zero volts, and the resistance of the inductor is 0.130Ω, FET on resistance of 0.2Ω and the diode voltage drop is 0.5V. The dashed line is the maximum switching frequency to avoid pulse skipping. Enter these equations in a spreadsheet or other software or use the SwitcherPro design software to determine the switching frequency.

$$f_{SW(max\,skip)} = \left(\frac{1}{t_{ON}}\right) \times \left(\frac{(I_L \times Rdc + V_{OUT} + Vd)}{(V_{IN} - I_L \times Rhs + Vd)}\right) \tag{12}$$

$$f_{SW(shift)} = \frac{fdiv}{t_{ON}} \times \left(\frac{(I_L \times Rdc + V_{OUTSC} + Vd)}{(V_{IN} - I_L \text{ x } Rhs + Vd)}\right) \tag{13}$$

I_L	inductor current
Rdc	inductor resistance
V_{IN}	maximum input voltage
V_{OUT}	output voltage
V_{OUTSC}	output voltage during short
Vd	diode voltage drop
$R_{DS(on)}$	switch on resistance
t_{ON}	controllable on time
f_{DIV}	frequency divide equals (1, 2, 4, or 8)

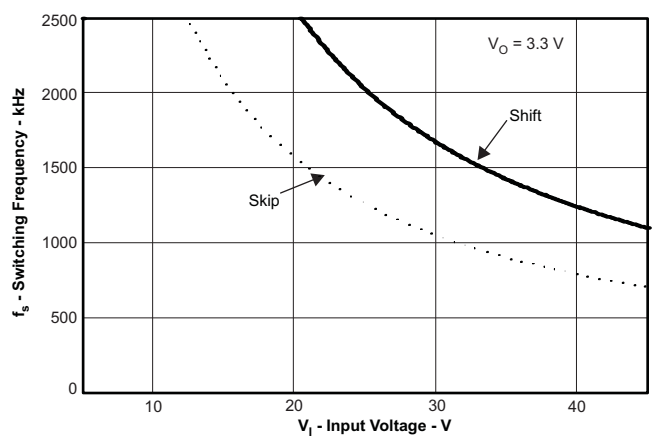

Figure 40. Maximum Switching Frequency vs. Input Voltage

DETAILED DESCRIPTION (continued)

How to Interface to RT/CLK Pin

The RT/CLK pin can be used to synchronize the regulator to an external system clock. To implement the synchronization feature connect a square wave to the RT/CLK pin through the circuit network shown in Figure 41. The square wave amplitude must transition lower than 0.5V and higher than 2.2V on the RT/CLK pin and have an on time greater than 40 ns and an off time greater than 40 ns. The synchronization frequency range is 300 kHz to 2200 kHz. The rising edge of the PH will be synchronized to the falling edge of RT/CLK pin signal. The external synchronization circuit should be designed in such a way that the device will have the default frequency set resistor connected from the RT/CLK pin to ground should the synchronization signal turn off. It is recommended to use a frequency set resistor connected as shown in Figure 41 through a 50Ω resistor to ground. The resistor should set the switching frequency close to the external CLK frequency. It is recommended to ac couple the synchronization signal through a 10 pF ceramic capacitor to RT/CLK pin and a 4kΩ series resistor. The series resistor reduces PH jitter in heavy load applications when synchronizing to an external clock and in applications which transition from synchronizing to RT mode. The first time the CLK is pulled above the CLK threshold the device switches from the RT resistor frequency to PLL mode. The internal 0.5V voltage source is removed and the CLK pin becomes high impedance as the PLL starts to lock onto the external signal. Since there is a PLL on the regulator the switching frequency can be higher or lower than the frequency set with the external resistor. The device transitions from the resistor mode to the PLL mode and then will increase or decrease the switching frequency until the PLL locks onto the CLK frequency within 100 microseconds.

When the device transitions from the PLL to resistor mode the switching frequency will slow down from the CLK frequency to 150 kHz, then reapply the 0.5V voltage and the resistor will then set the switching frequency. The switching frequency is divided by 8, 4, 2, and 1 as the voltage ramps from 0 to 0.8 volts on VSENSE pin. The device implements a digital frequency shift to enable synchronizing to an external clock during normal startup and fault conditions. Figure 42, Figure 43 and Figure 44 show the device synchronized to an external system clock in continuous conduction mode (ccm) discontinuous conduction (dcm) and pulse skip mode (psm).

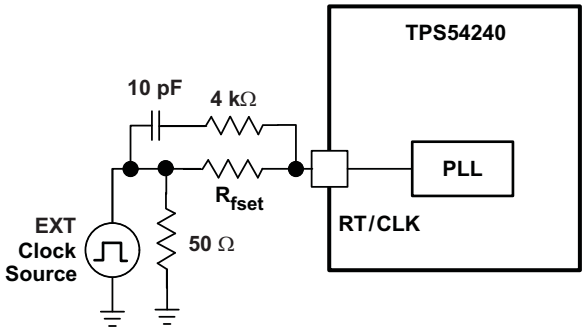

Figure 41. Synchronizing to a System Clock

Copyright © 2010, Texas Instruments Incorporated

DETAILED DESCRIPTION (continued)

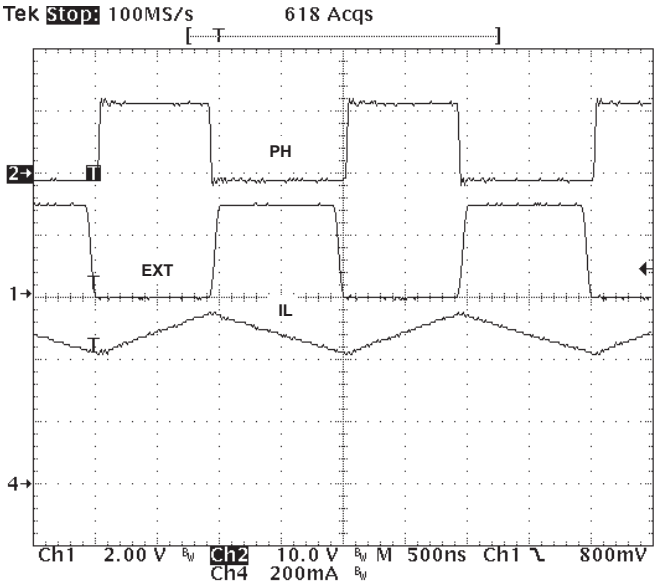

Figure 42. Plot of Synchronizing in ccm

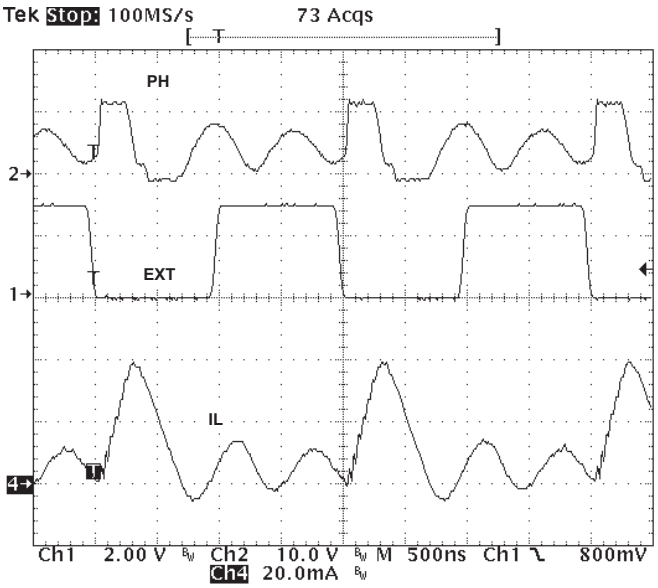

Figure 43. Plot of Synchronizing in dcm

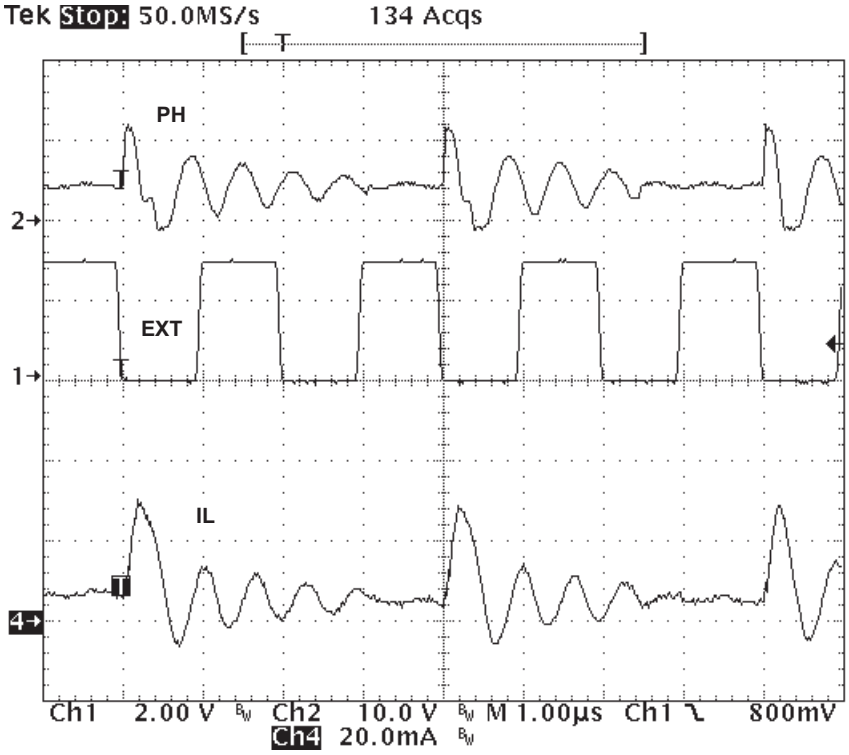

Figure 44. Plot of Synchronizing in PSM

Power Good (PWRGD Pin)

The PWRGD pin is an open drain output. Once the VSENSE pin is between 94% and 107% of the internal voltage reference the PWRGD pin is de-asserted and the pin floats. It is recommended to use a pull-up resistor between the values of 10 and 100kΩ to a voltage source that is 5.5V or less. The PWRGD is in a defined state once the VIN input voltage is greater than 1.5V but with reduced current sinking capability. The PWRGD will achieve full current sinking capability as VIN input voltage approaches 3V.

Copyright © 2010, Texas Instruments Incorporated

DETAILED DESCRIPTION (continued)

The PWRGD pin is pulled low when the VSENSE is lower than 92% or greater than 109% of the nominal internal reference voltage. Also, the PWRGD is pulled low, if the UVLO or thermal shutdown are asserted or the EN pin pulled low.

Overvoltage Transient Protection

The TPS54240 incorporates an overvoltage transient protection (OVTP) circuit to minimize voltage overshoot when recovering from output fault conditions or strong unload transients on power supply designs with low value output capacitance. For example, when the power supply output is overloaded the error amplifier compares the actual output voltage to the internal reference voltage. If the VSENSE pin voltage is lower than the internal reference voltage for a considerable time, the output of the error amplifier will respond by clamping the error amplifier output to a high voltage. Thus, requesting the maximum output current. Once the condition is removed, the regulator output rises and the error amplifier output transitions to the steady state duty cycle. In some applications, the power supply output voltage can respond faster than the error amplifier output can respond, this actuality leads to the possibility of an output overshoot. The OVTP feature minimizes the output overshoot, when using a low value output capacitor, by implementing a circuit to compare the VSENSE pin voltage to OVTP threshold which is 109% of the internal voltage reference. If the VSENSE pin voltage is greater than the OVTP threshold, the high side MOSFET is disabled preventing current from flowing to the output and minimizing output overshoot. When the VSENSE voltage drops lower than the OVTP threshold, the high side MOSFET is allowed to turn on at the next clock cycle.

Thermal Shutdown

The device implements an internal thermal shutdown to protect itself if the junction temperature exceeds 182°C. The thermal shutdown forces the device to stop switching when the junction temperature exceeds the thermal trip threshold. Once the die temperature decreases below 182°C, the device reinitiates the power up sequence by discharging the SS/TR pin.

Small Signal Model for Loop Response

Figure 45 shows an equivalent model for the TPS54240 control loop which can be modeled in a circuit simulation program to check frequency response and dynamic load response. The error amplifier is a transconductance amplifier with a gm_{EA} of 310 μA/V. The error amplifier can be modeled using an ideal voltage controlled current source. The resistor R_o and capacitor C_o model the open loop gain and frequency response of the amplifier. The 1mV ac voltage source between the nodes a and b effectively breaks the control loop for the frequency response measurements. Plotting c/a shows the small signal response of the frequency compensation. Plotting a/b shows the small signal response of the overall loop. The dynamic loop response can be checked by replacing R_L with a current source with the appropriate load step amplitude and step rate in a time domain analysis. This equivalent model is only valid for continuous conduction mode designs.

Copyright © 2010, Texas Instruments Incorporated

DETAILED DESCRIPTION (continued)

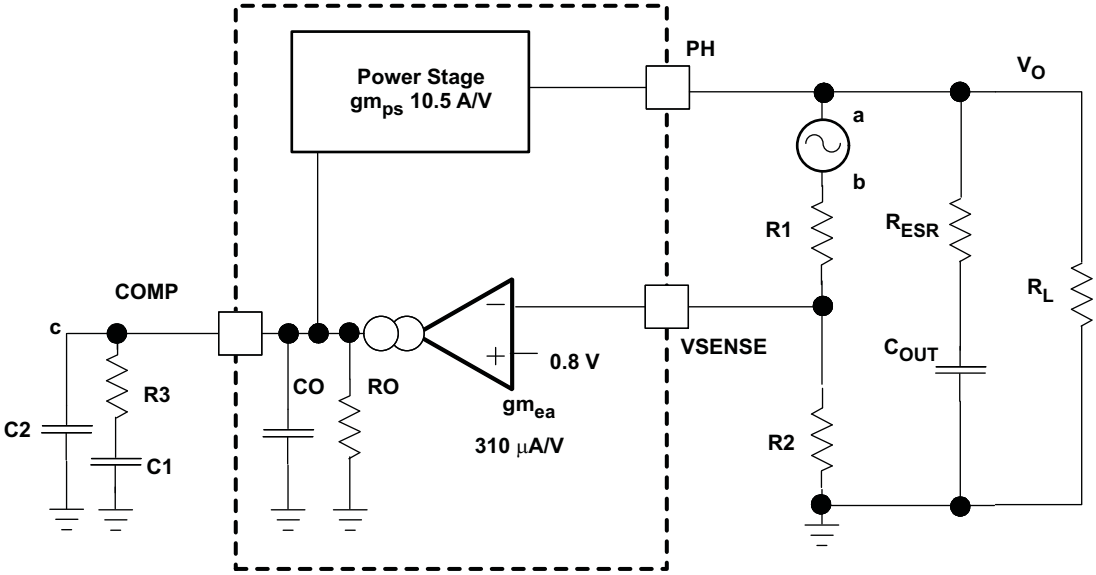

Figure 45. Small Signal Model for Loop Response

Simple Small Signal Model for Peak Current Mode Control

Figure 46 describes a simple small signal model that can be used to understand how to design the frequency compensation. The TPS54240 power stage can be approximated to a voltage-controlled current source (duty cycle modulator) supplying current to the output capacitor and load resistor. The control to output transfer function is shown in Equation 14 and consists of a dc gain, one dominant pole, and one ESR zero. The quotient of the change in switch current and the change in COMP pin voltage (node c in Figure 45) is the power stage transconductance. The gm_{PS} for the TPS54240 is 10.5 A/V. The low-frequency gain of the power stage frequency response is the product of the transconductance and the load resistance as shown in Equation 15.

As the load current increases and decreases, the low-frequency gain decreases and increases, respectively. This variation with the load may seem problematic at first glance, but fortunately the dominant pole moves with the load current (see Equation 16). The combined effect is highlighted by the dashed line in the right half of Figure 46. As the load current decreases, the gain increases and the pole frequency lowers, keeping the 0-dB crossover frequency the same for the varying load conditions which makes it easier to design the frequency compensation. The type of output capacitor chosen determines whether the ESR zero has a profound effect on the frequency compensation design. Using high ESR aluminum electrolytic capacitors may reduce the number frequency compensation components needed to stabilize the overall loop because the phase margin increases from the ESR zero at the lower frequencies (see Equation 17).

Copyright © 2010, Texas Instruments Incorporated

DETAILED DESCRIPTION (continued)

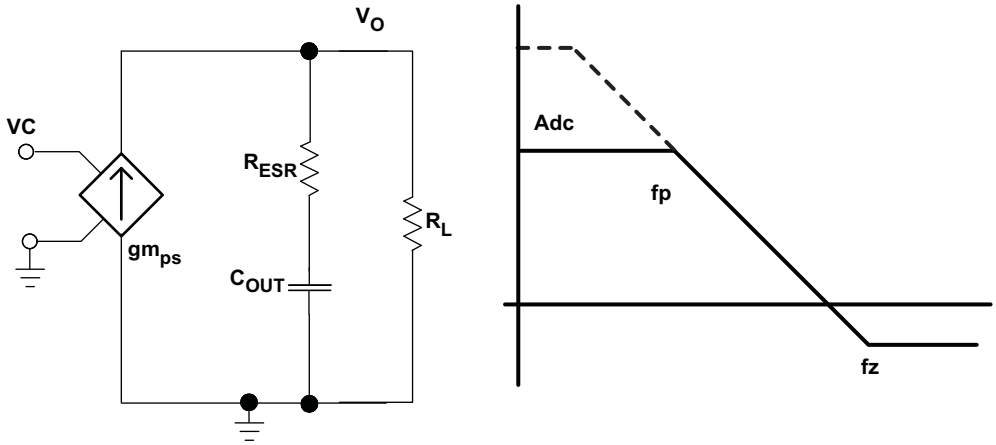

Figure 46. Simple Small Signal Model and Frequency Response for Peak Current Mode Control

$$\frac{V_{OUT}}{V_C} = Adc \times \frac{\left(1 + \frac{s}{2\pi \times f_Z}\right)}{\left(1 + \frac{s}{2\pi \times f_P}\right)} \tag{14}$$

$$Adc = gm_{ps} \times R_L \tag{15}$$

$$f_P = \frac{1}{C_{OUT} \times R_L \times 2\pi} \tag{16}$$

$$f_Z = \frac{1}{C_{OUT} \times R_{ESR} \times 2\pi} \tag{17}$$

Small Signal Model for Frequency Compensation

The TPS54240 uses a transconductance amplifier for the error amplifier and readily supports three of the commonly-used frequency compensation circuits. Compensation circuits Type 2A, Type 2B, and Type 1 are shown in Figure 47. Type 2 circuits most likely implemented in high bandwidth power-supply designs using low ESR output capacitors. The Type 1 circuit is used with power-supply designs with high-ESR aluminum electrolytic or tantalum capacitors.. Equation 18 and Equation 19 show how to relate the frequency response of the amplifier to the small signal model in Figure 47. The open-loop gain and bandwidth are modeled using the R_O and C_O shown in Figure 47. See the application section for a design example using a Type 2A network with a low ESR output capacitor.

Equation 18 through Equation 27 are provided as a reference for those who prefer to compensate using the preferred methods. Those who prefer to use prescribed method use the method outlined in the application section or use switched information.

Copyright © 2010, Texas Instruments Incorporated

DETAILED DESCRIPTION (continued)

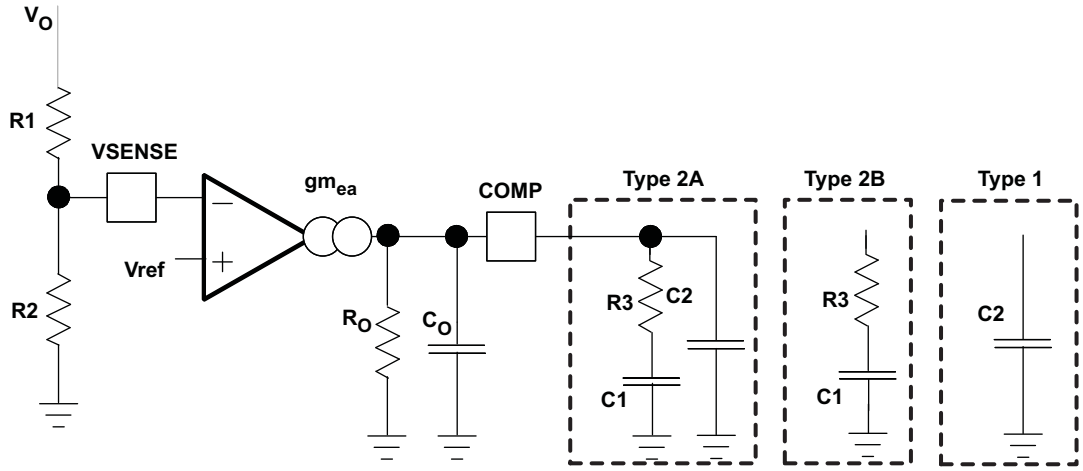

Figure 47. Types of Frequency Compensation

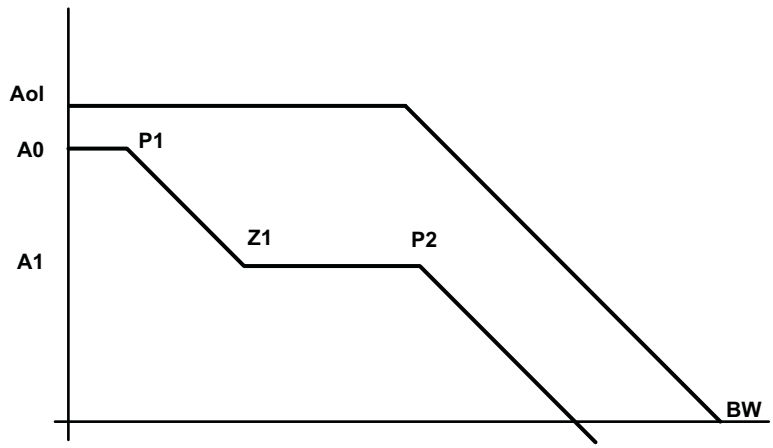

Figure 48. Frequency Response of the Type 2A and Type 2B Frequency Compensation

$$Ro = \frac{Aol(V/V)}{gm_{ea}} \tag{18}$$

$$C_O = \frac{gm_{ea}}{2\pi \times BW\ (Hz)} \tag{19}$$

$$EA = A0 \times \frac{\left(1 + \frac{s}{2\pi \times f_{Z1}}\right)}{\left(1 + \frac{s}{2\pi \times f_{P1}}\right) \times \left(1 + \frac{s}{2\pi \times f_{P2}}\right)} \tag{20}$$

$$A0 = gm_{ea} \times Ro \times \frac{R2}{R1 + R2} \tag{21}$$

$$A1 = gm_{ea} \times Ro || R3 \times \frac{R2}{R1 + R2} \tag{22}$$

$$P1 = \frac{1}{2\pi \times Ro \times C1} \tag{23}$$

DETAILED DESCRIPTION (continued)

$$Z1 = \frac{1}{2\pi \times R3 \times C1} \tag{24}$$

$$P2 = \frac{1}{2\pi \times R3 \,||\, R_O \times (C2 + C_O)} \text{ type 2a} \tag{25}$$

$$P2 = \frac{1}{2\pi \times R3 \,||\, R_O \times C_O} \text{ type 2b} \tag{26}$$

$$P2 = \frac{1}{2\pi \times R_O \times (C2 + C_O)} \text{ type 1} \tag{27}$$

Copyright © 2010, Texas Instruments Incorporated

APPLICATION INFORMATION

Design Guide — Step-By-Step Design Procedure

This example details the design of a high frequency switching regulator design using ceramic output capacitors. A few parameters must be known in order to start the design process. These parameters are typically determined at the system level. For this example, we will start with the following known parameters:

Output Voltage	3.3 V
Transient Response 0 to 1.5A load step	ΔVout = 3 %
Maximum Output Current	2.5 A
Input Voltage	12 V nom. 10.8 V to 13.2 V
Output Voltage Ripple	1% of Vout
Start Input Voltage (rising VIN)	6.0 V
Stop Input Voltage (falling VIN)	5.5 V

Selecting the Switching Frequency

The first step is to decide on a switching frequency for the regulator. Typically, the user will want to choose the highest switching frequency possible since this will produce the smallest solution size. The high switching frequency allows for lower valued inductors and smaller output capacitors compared to a power supply that switches at a lower frequency. The switching frequency that can be selected is limited by the minimum on-time of the internal power switch, the input voltage and the output voltage and the frequency shift limitation.

Equation 12 and Equation 13 must be used to find the maximum switching frequency for the regulator, choose the lower value of the two equations. Switching frequencies higher than these values will result in pulse skipping or the lack of overcurrent protection during a short circuit.

The typical minimum on time, t_{onmin}, is 135 ns for the TPS54240. For this example, the output voltage is 3.3 V and the maximum input voltage is 13.2 V, which allows for a maximum switch frequency up to 2247 kHz when including the inductor resistance, on resistance output current and diode voltage in Equation 12. To ensure overcurrent runaway is not a concern during short circuits in your design use Equation 13 or the solid curve in Figure 40 to determine the maximum switching frequency. With a maximum input voltage of 13.2 V, assuming a diode voltage of 0.7 V, inductor resistance of 26 mΩ, switch resistance of 200 mΩ, a current limit value of 3.5 A and a short circuit output voltage of 0.2 V. The maximum switching frequency is approximately 4449 kHz.

For this design, a much lower switching frequency of 300 kHz is used. To determine the timing resistance for a given switching frequency, use Equation 11 or the curve in Figure 39.

The switching frequency is set by resistor R_3 shown in Figure 49 For 300 kHz operation a 412 kΩ resistor is required.

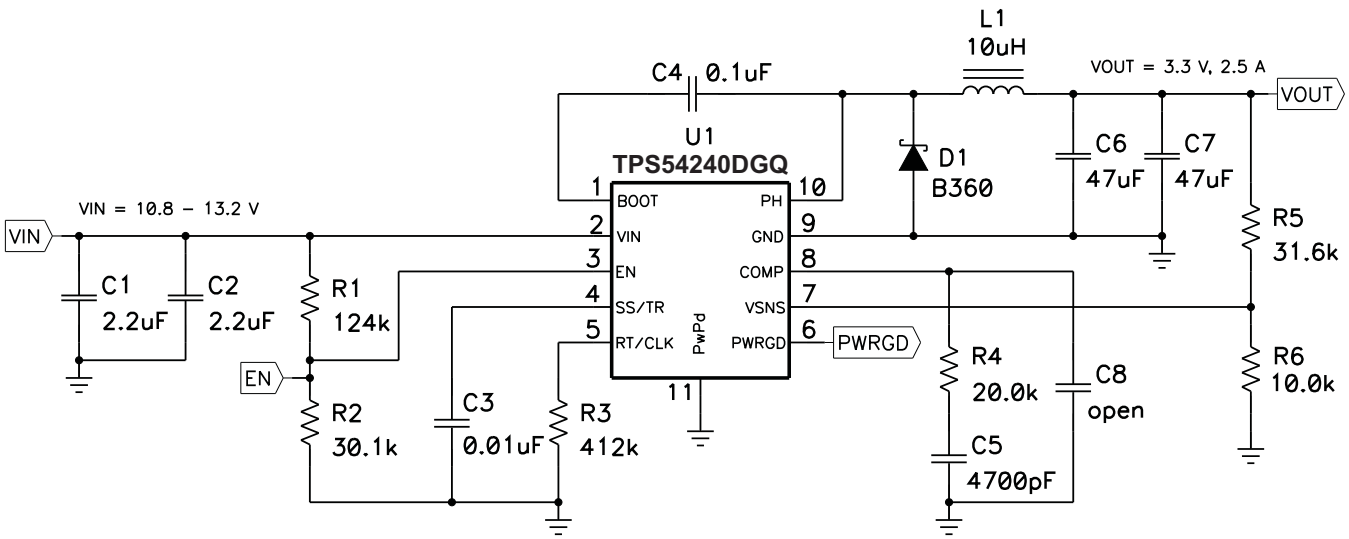

Figure 49. 3.3V Output TPS54240 Design Example.

Output Inductor Selection (L_O)

To calculate the minimum value of the output inductor, use Equation 28.

K_{IND} is a coefficient that represents the amount of inductor ripple current relative to the maximum output current.

The inductor ripple current will be filtered by the output capacitor. Therefore, choosing high inductor ripple currents will impact the selection of the output capacitor since the output capacitor must have a ripple current rating equal to or greater than the inductor ripple current. In general, the inductor ripple value is at the discretion of the designer; however, the following guidelines may be used.

For designs using low ESR output capacitors such as ceramics, a value as high as K_{IND} = 0.3 may be used. When using higher ESR output capacitors, K_{IND} = 0.2 yields better results. Since the inductor ripple current is part of the PWM control system, the inductor ripple current should always be greater than 150 mA for dependable operation. In a wide input voltage regulator, it is best to choose an inductor ripple current on the larger side. This allows the inductor to still have a measurable ripple current with the input voltage at its minimum.

For this design example, use K_{IND} = 0.3 and the minimum inductor value is calculated to be 11 µH. For this design, a nearest standard value was chosen: 10 µH. For the output filter inductor, it is important that the RMS current and saturation current ratings not be exceeded. The RMS and peak inductor current can be found from Equation 30 and Equation 31.

For this design, the RMS inductor current is 2.51 A and the peak inductor current is 2.913 A. The chosen inductor is a Coilcraft MSS1038-103NLB . It has a saturation current rating of 4.52 A and an RMS current rating of 4.05 A.

As the equation set demonstrates, lower ripple currents will reduce the output voltage ripple of the regulator but will require a larger value of inductance. Selecting higher ripple currents will increase the output voltage ripple of the regulator but allow for a lower inductance value.

The current flowing through the inductor is the inductor ripple current plus the output current. During power up, faults or transient load conditions, the inductor current can increase above the calculated peak inductor current level calculated above. In transient conditions, the inductor current can increase up to the switch current limit of the device. For this reason, the most conservative approach is to specify an inductor with a saturation current rating equal to or greater than the switch current limit rather than the peak inductor current.

$$Lo\ min = \frac{Vinmax - Vout}{Io \times K_{IND}} \times \frac{Vout}{Vinmax \times fsw} \tag{28}$$

Copyright © 2010, Texas Instruments Incorporated

$$I_{RIPPLE} = \frac{V_{OUT} \times (Vinmax - V_{OUT})}{Vinmax \times L_O \times f_{SW}} \tag{29}$$

$$I_{L(rms)} = \sqrt{(I_O)^2 + \frac{1}{12} \times \left(\frac{V_{OUT} \times (Vinmax - V_{OUT})}{Vinmax \times L_O \times f_{SW}}\right)^2} \tag{30}$$

$$ILpeak = Iout + \frac{Iripple}{2} \tag{31}$$

Output Capacitor

There are three primary considerations for selecting the value of the output capacitor. The output capacitor will determine the modulator pole, the output voltage ripple, and how the regulators responds to a large change in load current. The output capacitance needs to be selected based on the more stringent of these three criteria.

The desired response to a large change in the load current is the first criteria. The output capacitor needs to supply the load with current when the regulator can not. This situation would occur if there are desired hold-up times for the regulator where the output capacitor must hold the output voltage above a certain level for a specified amount of time after the input power is removed. The regulator also will temporarily not be able to supply sufficient output current if there is a large, fast increase in the current needs of the load such as transitioning from no load to a full load. The regulator usually needs two or more clock cycles for the control loop to see the change in load current and output voltage and adjust the duty cycle to react to the change. The output capacitor must be sized to supply the extra current to the load until the control loop responds to the load change. The output capacitance must be large enough to supply the difference in current for 2 clock cycles while only allowing a tolerable amount of droop in the output voltage. Equation 32 shows the minimum output capacitance necessary to accomplish this.

Where ΔIout is the change in output current, $f$sw is the regulators switching frequency and ΔVout is the allowable change in the output voltage. For this example, the transient load response is specified as a 3% change in Vout for a load step from 1.5 A to 2.5 A (full load). For this example, ΔIout = 2.5-1.5 = 1.0 A and ΔVout = 0.03 × 3.3 = 0.099 V. Using these numbers gives a minimum capacitance of 67 μF. This value does not take the ESR of the output capacitor into account in the output voltage change. For ceramic capacitors, the ESR is usually small enough to ignore in this calculation. Aluminum electrolytic and tantalum capacitors have higher ESR that should be taken into account.

The catch diode of the regulator can not sink current so any stored energy in the inductor will produce an output voltage overshoot when the load current rapidly decreases, see Figure 50. The output capacitor must also be sized to absorb energy stored in the inductor when transitioning from a high load current to a lower load current. The excess energy that gets stored in the output capacitor will increase the voltage on the capacitor. The capacitor must be sized to maintain the desired output voltage during these transient periods. Equation 33 is used to calculate the minimum capacitance to keep the output voltage overshoot to a desired value. Where L is the value of the inductor, I_{OH} is the output current under heavy load, I_{OL} is the output under light load, Vf is the final peak output voltage, and Vi is the initial capacitor voltage. For this example, the worst case load step will be from 2.5 A to 1.5 A. The output voltage will increase during this load transition and the stated maximum in our specification is 3 % of the output voltage. This will make Vf = 1.03 × 3.3 = 3.399. Vi is the initial capacitor voltage which is the nominal output voltage of 3.3 V. Using these numbers in Equation 33 yields a minimum capacitance of 60 μF.

Equation 34 calculates the minimum output capacitance needed to meet the output voltage ripple specification. Where fsw is the switching frequency, $V_{oripple}$ is the maximum allowable output voltage ripple, and I_{ripple} is the inductor ripple current. Equation 34 yields 12 μF.

Equation 35 calculates the maximum ESR an output capacitor can have to meet the output voltage ripple specification. Equation 35 indicates the ESR should be less than 36 mΩ.

The most stringent criteria for the output capacitor is 67 μF of capacitance to keep the output voltage in regulation during an load transient.

Additional capacitance de-ratings for aging, temperature and dc bias should be factored in which will increase this minimum value. For this example, 2 x 47 μF, 10 V ceramic capacitors with 3 mΩ of ESR will be used. The derated capacitance is 72.4 μF, above the minimum required capacitance of 67 μF.

Copyright © 2010, Texas Instruments Incorporated

Capacitors generally have limits to the amount of ripple current they can handle without failing or producing excess heat. An output capacitor that can support the inductor ripple current must be specified. Some capacitor data sheets specify the Root Mean Square (RMS) value of the maximum ripple current. Equation 36 can be used to calculate the RMS ripple current the output capacitor needs to support. For this application, Equation 36 yields 238 mA.

$$Cout > \frac{2 \times \Delta Iout}{fsw \times \Delta Vout} \tag{32}$$

$$Cout > Lo \times \frac{\left(Ioh^2 - Iol^2\right)}{\left(Vf^2 - Vi^2\right)} \tag{33}$$

$$Cout > \frac{1}{8 \times fsw} \times \frac{1}{\frac{V_{ORIPPLE}}{I_{RIPPLE}}} \tag{34}$$

$$R_{ESR} < \frac{V_{ORIPPLE}}{I_{RIPPLE}} \tag{35}$$

$$Icorms = \frac{Vout \times (Vin\ max - Vout)}{\sqrt{12} \times Vin\ max \times Lo \times fsw} \tag{36}$$

Catch Diode

The TPS54240 requires an external catch diode between the PH pin and GND. The selected diode must have a reverse voltage rating equal to or greater than Vinmax. The peak current rating of the diode must be greater than the maximum inductor current. The diode should also have a low forward voltage. Schottky diodes are typically a good choice for the catch diode due to their low forward voltage. The lower the forward voltage of the diode, the higher the efficiency of the regulator.

Typically, the higher the voltage and current ratings the diode has, the higher the forward voltage will be. Although the design example has an input voltage up to 13.2V, a diode with a minimum of 60V reverse voltage is selected.

For the example design, the B360B-13-F Schottky diode is selected for its lower forward voltage and it comes in a larger package size which has good thermal characteristics over small devices. The typical forward voltage of the B360B-13-F is 0.70 volts.

The diode must also be selected with an appropriate power rating. The diode conducts the output current during the off-time of the internal power switch. The off-time of the internal switch is a function of the maximum input voltage, the output voltage, and the switching frequency. The output current during the off-time is multiplied by the forward voltage of the diode which equals the conduction losses of the diode. At higher switch frequencies, the ac losses of the diode need to be taken into account. The ac losses of the diode are due to the charging and discharging of the junction capacitance and reverse recovery. Equation 37 is used to calculate the total power dissipation, conduction losses plus ac losses, of the diode.

The B360B-13-F has a junction capacitance of 200 pF. Using Equation 37, the selected diode will dissipate 1.32 Watts.

If the power supply spends a significant amount of time at light load currents or in sleep mode consider using a diode which has a low leakage current and slightly higher forward voltage drop.

$$Pd = \frac{(Vin\ max - Vout) \times Iout \times Vfd}{Vin\ max} + \frac{Cj \times fsw \times \left(Vin + Vfd\right)^2}{2} \tag{37}$$

Copyright © 2010, Texas Instruments Incorporated

Input Capacitor

The TPS54240 requires a high quality ceramic, type X5R or X7R, input decoupling capacitor of at least 3 μF of effective capacitance and in some applications a bulk capacitance. The effective capacitance includes any dc bias effects. The voltage rating of the input capacitor must be greater than the maximum input voltage. The capacitor must also have a ripple current rating greater than the maximum input current ripple of the TPS54240. The input ripple current can be calculated using Equation 38.

The value of a ceramic capacitor varies significantly over temperature and the amount of dc bias applied to the capacitor. The capacitance variations due to temperature can be minimized by selecting a dielectric material that is stable over temperature. X5R and X7R ceramic dielectrics are usually selected for power regulator capacitors because they have a high capacitance to volume ratio and are fairly stable over temperature. The output capacitor must also be selected with the dc bias taken into account. The capacitance value of a capacitor decreases as the dc bias across a capacitor increases.

For this example design, a ceramic capacitor with at least a 60V voltage rating is required to support the maximum input voltage. Common standard ceramic capacitor voltage ratings include 4V, 6.3V, 10V, 16V, 25V, 50V or 100V so a 100V capacitor should be selected. For this example, two 2.2μF, 100V capacitors in parallel have been selected. Table 2 shows a selection of high voltage capacitors. The input capacitance value determines the input ripple voltage of the regulator. The input voltage ripple can be calculated using Equation 39. Using the design example values, Ioutmax = 2.5 A, Cin = 4.4μF, $f$sw = 300 kHz, yields an input voltage ripple of 206 mV and a rms input ripple current of 1.15 A.

$$\text{Icirms} = \text{Iout} \times \sqrt{\frac{\text{Vout}}{\text{Vin min}} \times \frac{(\text{Vin min} - \text{Vout})}{\text{Vin min}}} \tag{38}$$

$$\Delta\text{Vin} = \frac{\text{Iout max} \times 0.25}{\text{Cin} \times f\text{sw}} \tag{39}$$

Table 2. Capacitor Types

VENDOR	VALUE (μF)	EIA Size	VOLTAGE	DIALECTRIC	COMMENTS
Murata	1.0 to 2.2	1210	100 V	X7R	GRM32 series
	1.0 to 4.7		50 V		
	1.0	1206	100 V		GRM31 series
	1.0 to 2.2		50 V		
Vishay	1.0 10 1.8	2220	50 V		VJ X7R series
	1.0 to 1.2		100 V		
	1.0 to 3.9	2225	50 V		
	1.0 to 1.8		100 V		
TDK	1.0 to 2.2	1812	100 V		C series C4532
	1.5 to 6.8		50 V		
	1.0. to 2.2	1210	100 V		C series C3225
	1.0 to 3.3		50 V		
AVX	1.0 to 4.7	1210	50 V		X7R dielectric series
	1.0		100 V		
	1.0 to 4.7	1812	50 V		
	1.0 to 2.2		100 V		

Slow Start Capacitor

The slow start capacitor determines the minimum amount of time it will take for the output voltage to reach its nominal programmed value during power up. This is useful if a load requires a controlled voltage slew rate. This is also used if the output capacitance is large and would require large amounts of current to quickly charge the capacitor to the output voltage level. The large currents necessary to charge the capacitor may make the TPS54240 reach the current limit or excessive current draw from the input power supply may cause the input voltage rail to sag. Limiting the output voltage slew rate solves both of these problems.

Copyright © 2010, Texas Instruments Incorporated

The slow start time must be long enough to allow the regulator to charge the output capacitor up to the output voltage without drawing excessive current. Equation 40 can be used to find the minimum slow start time, tss, necessary to charge the output capacitor, Cout, from 10% to 90% of the output voltage, Vout, with an average slow start current of Issavg. In the example, to charge the effective output capacitance of 72.4 µF up to 3.3V while only allowing the average output current to be 1 A would require a 0.19 ms slow start time.

Once the slow start time is known, the slow start capacitor value can be calculated using Equation 6. For the example circuit, the slow start time is not too critical since the output capacitor value is 2 x 47µF which does not require much current to charge to 3.3V. The example circuit has the slow start time set to an arbitrary value of 3.5 ms which requires a 8.75 nF slow start capacitor. For this design, the next larger standard value of 10 nF is used.

$$Tss > \frac{Cout \times Vout \times 0.8}{Issavg} \tag{40}$$

Bootstrap Capacitor Selection

A 0.1-µF ceramic capacitor must be connected between the BOOT and PH pins for proper operation. It is recommended to use a ceramic capacitor with X5R or better grade dielectric. The capacitor should have a 10V or higher voltage rating.

Under Voltage Lock Out Set Point

The Under Voltage Lock Out (UVLO) can be adjusted using an external voltage divider on the EN pin of the TPS54240. The UVLO has two thresholds, one for power up when the input voltage is rising and one for power down or brown outs when the input voltage is falling. For the example design, the supply should turn on and start switching once the input voltage increases above 6.0 V (enabled). After the regulator starts switching, it should continue to do so until the input voltage falls below 5.5 V (UVLO stop).

The programmable UVLO and enable voltages are set using the resistor divider of R1 and R2 between Vin and ground to the EN pin. Equation 2 through Equation 3 can be used to calculate the resistance values necessary. For the example application, a 124 kΩ between Vin and EN (R1) and a 30.1 kΩ between EN and ground (R2) are required to produce the 6.0 and 5.5 volt start and stop voltages.

Output Voltage and Feedback Resistors Selection

The voltage divider of R5 and R6 is used to set the output voltage. For the example design, 10.0 kΩ was selected for R6. Using Equation 1, R5 is calculated as 31.25 kΩ. The nearest standard 1% resistor is 31.6 kΩ. Due to current leakage of the VSENSE pin, the current flowing through the feedback network should be greater than 1 µA in order to maintain the output voltage accuracy. This requirement makes the maximum value of R2 equal to 800 kΩ. Choosing higher resistor values will decrease quiescent current and improve efficiency at low output currents but may introduce noise immunity problems.

Compensation

There are several methods used to compensate DC/DC regulators. The method presented here is easy to calculate and ignores the effects of the slope compensation that is internal to the device. Since the slope compensation is ignored, the actual cross over frequency will usually be lower than the cross over frequency used in the calculations. This method assumes the crossover frequency is between the modulator pole and the esr zero and the esr zero is at least 10 times greater the modulator pole. Use SwitcherPro software for a more accurate design.

To get started, the modulator pole, fpmod, and the esr zero, fz1 must be calculated using Equation 41 and Equation 42. For Cout, use a derated value of 40 µF. Use equations Equation 43 and Equation 44, to estimate a starting point for the crossover frequency, fco, to design the compensation. For the example design, fpmod is 1206 Hz and fzmod is 530.5 kHz. Equation 43 is the geometric mean of the modulator pole and the esr zero and Equation 44 is the mean of modulator pole and the switching frequency. Equation 43 yields 25.3 kHz and Equation 44 gives 13.4 kHz. Use the lower value of Equation 43 or Equation 44 for an initial crossover frequency. For this example, a higher fco is desired to improve transient response. the target fco is 35.0 kHz. Next, the compensation components are calculated. A resistor in series with a capacitor is used to create a compensating zero. A capacitor in parallel to these two components forms the compensating pole.

 Copyright © 2010, Texas Instruments Incorporated

$$fp\ mod = \frac{Ioutmax}{2 \times \pi \times Vout \times Cout} \quad (41)$$

$$fz\ mod = \frac{1}{2 \times \pi \times Resr \times Cout} \quad (42)$$

$$f_{co} = \sqrt{f_p mod \times f_z mod} \quad (43)$$

$$f_{co} = \sqrt{f_p mod \times \frac{f_{sw}}{2}} \quad (44)$$

To determine the compensation resistor, R4, use Equation 45. Assume the power stage transconductance, gmps, is 10.5A/V. The output voltage, Vo, reference voltage, VREF, and amplifier transconductance, gmea, are 3.3V, 0.8V and 310 μA/V, respectively. R4 is calculated to be 20.2 kΩ, use the nearest standard value of 20.0 kΩ. Use Equation 46 to set the compensation zero to the modulator pole frequency. Equation 46 yields 4740 pF for compensating capacitor C5, a 4700 pF is used for this design.

$$R4 = \left(\frac{2 \times \pi \times f_{co} \times C_{out}}{gmps}\right) \times \left(\frac{V_{out}}{V_{ref} \times gmea}\right) \quad (45)$$

$$C5 = \frac{1}{2 \times \pi \times R4 \times f_p mod} \quad (46)$$

A compensation pole can be implemented if desired using an additional capacitor C8 in parallel with the series combination of R4 and C5. Use the larger value of Equation 47 and Equation 48 to calculate the C8, to set the compensation pole. C8 is not used for this design example.

$$C8 = \frac{C_o \times Resr}{R4} \quad (47)$$

$$C8 = \frac{1}{R4 \times f_{sw} \times \pi} \quad (48)$$

Discontinuous Mode and Eco Mode Boundary

With an input voltage of 12 V, the power supply enters discontinuous mode when the output current is less than 337 mA. The power supply enters EcoMode when the output current is lower than 5 mA.

The input current draw at no load is 392 μA.

APPLICATION CURVES

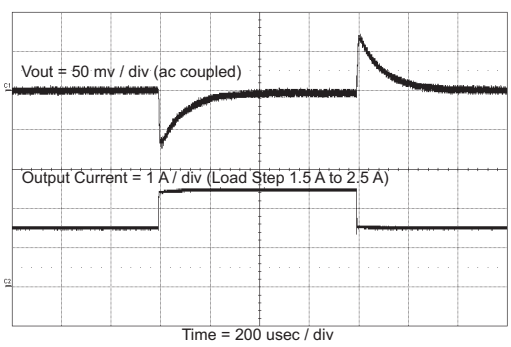

Figure 50. Load Transient

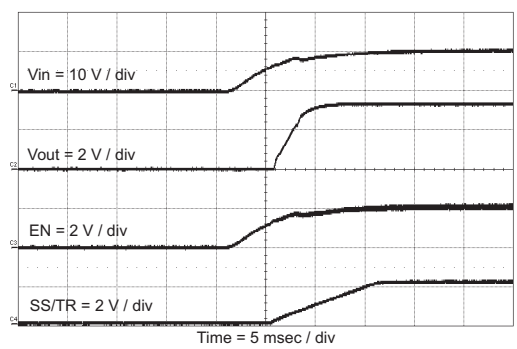

Figure 51. Startup With VIN

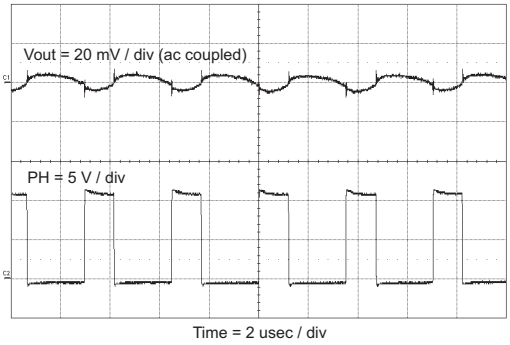

Figure 52. Output Ripple CCM

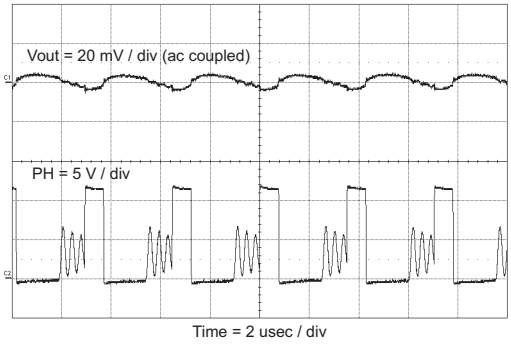

Figure 53. Output Ripple, DCM

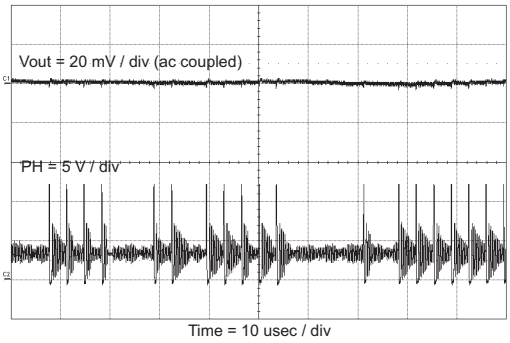

Figure 54. Output Ripple, PSM

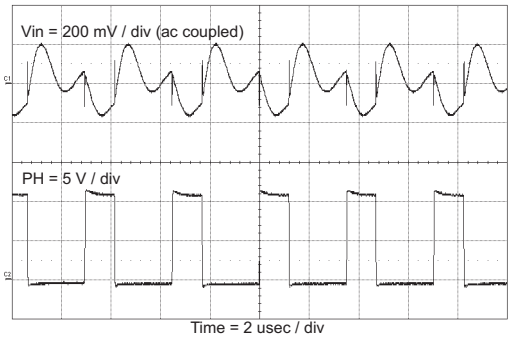

Figure 55. Input Ripple CCM

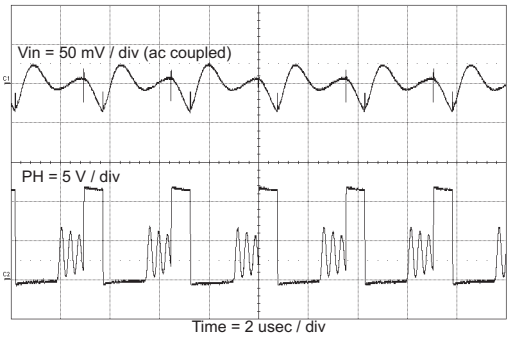

Figure 56. Input Ripple DCM

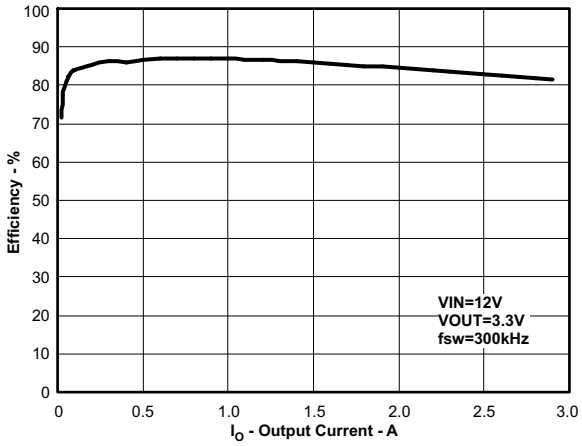

Figure 57. Efficiency vs Load Current

Copyright © 2010, Texas Instruments Incorporated

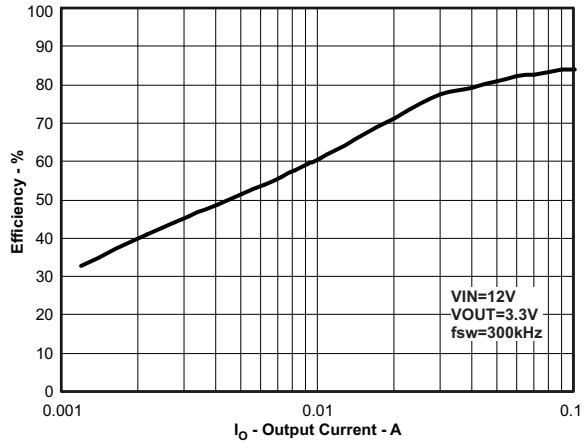

Figure 58. Light Load Efficiency

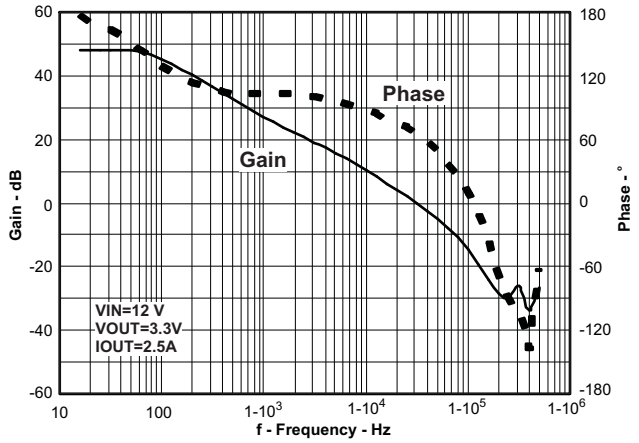

Figure 59. Overall Loop Frequency Response

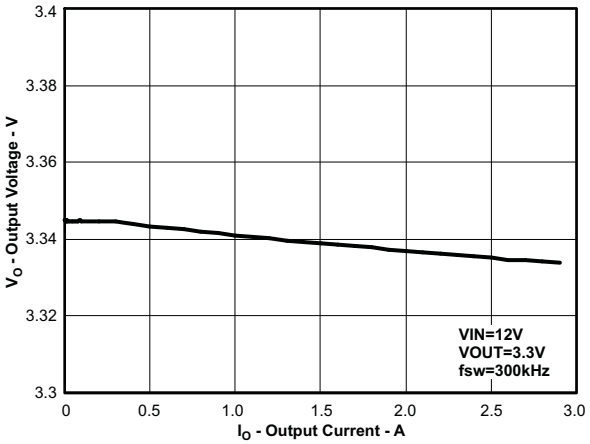

Figure 60. Regulation vs Load Current

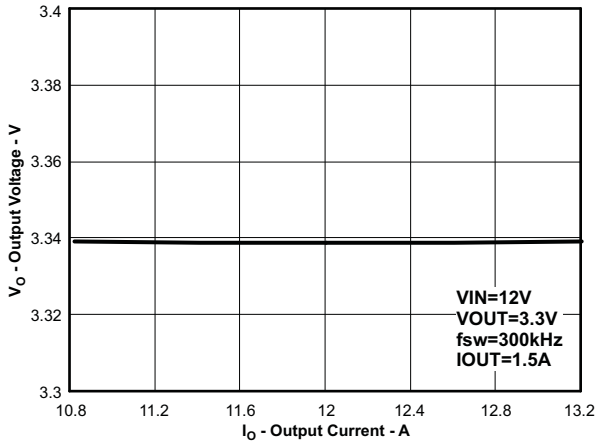

Figure 61. Regulation vs Input Voltage

Power Dissipation Estimate

The following formulas show how to estimate the IC power dissipation under continuous conduction mode (CCM) operation. These equations should not be used if the device is working in discontinuous conduction mode (DCM).

The power dissipation of the IC includes conduction loss (Pcon), switching loss (Psw), gate drive loss (Pgd) and supply current (Pq).

$$Pcon = Io^2 \times R_{DS(on)} \times \frac{Vout}{Vin} \quad (49)$$

$$Psw = Vin^2 \times fsw \times Io \times 0.25 \times 10^{-9} \quad (50)$$

$$Pgd = Vin \times 3 \times 10^{-9} \times fsw \quad (51)$$

$$Pq = 116 \times 10^{-6} \times Vin \quad (52)$$

Where:

IOUT is the output current (A).
$R_{DS(on)}$ is the on-resistance of the high-side MOSFET (Ω).
VOUT is the output voltage (V).
VIN is the input voltage (V).
fsw is the switching frequency (Hz).

So

$$Ptot = Pcon + Psw + Pgd + Pq \quad (53)$$

For given T_A,

$$TJ = TA + Rth \times Ptot \quad (54)$$

For given T_{JMAX} = 150°C

$$TAmax = TJmax - Rth \times Ptot \quad (55)$$

Where:

Ptot is the total device power dissipation (W).
T_A is the ambient temperature (°C).
T_J is the junction temperature (°C).
Rth is the thermal resistance of the package (°C/W).
T_{JMAX} is maximum junction temperature (°C).
T_{AMAX} is maximum ambient temperature (°C).

There will be additional power losses in the regulator circuit due to the inductor ac and dc losses, the catch diode and trace resistance that will impact the overall efficiency of the regulator.

Copyright © 2010, Texas Instruments Incorporated

Layout

Layout is a critical portion of good power supply design. There are several signals paths that conduct fast changing currents or voltages that can interact with stray inductance or parasitic capacitance to generate noise or degrade the power supplies performance. To help eliminate these problems, the VIN pin should be bypassed to ground with a low ESR ceramic bypass capacitor with X5R or X7R dielectric. Care should be taken to minimize the loop area formed by the bypass capacitor connections, the VIN pin, and the anode of the catch diode. See Figure 62 for a PCB layout example. The GND pin should be tied directly to the power pad under the IC and the power pad.

The power pad should be connected to any internal PCB ground planes using multiple vias directly under the IC. The PH pin should be routed to the cathode of the catch diode and to the output inductor. Since the PH connection is the switching node, the catch diode and output inductor should be located close to the PH pins, and the area of the PCB conductor minimized to prevent excessive capacitive coupling. For operation at full rated load, the top side ground area must provide adequate heat dissipating area. The RT/CLK pin is sensitive to noise so the RT resistor should be located as close as possible to the IC and routed with minimal lengths of trace. The additional external components can be placed approximately as shown. It may be possible to obtain acceptable performance with alternate PCB layouts, however this layout has been shown to produce good results and is meant as a guideline.

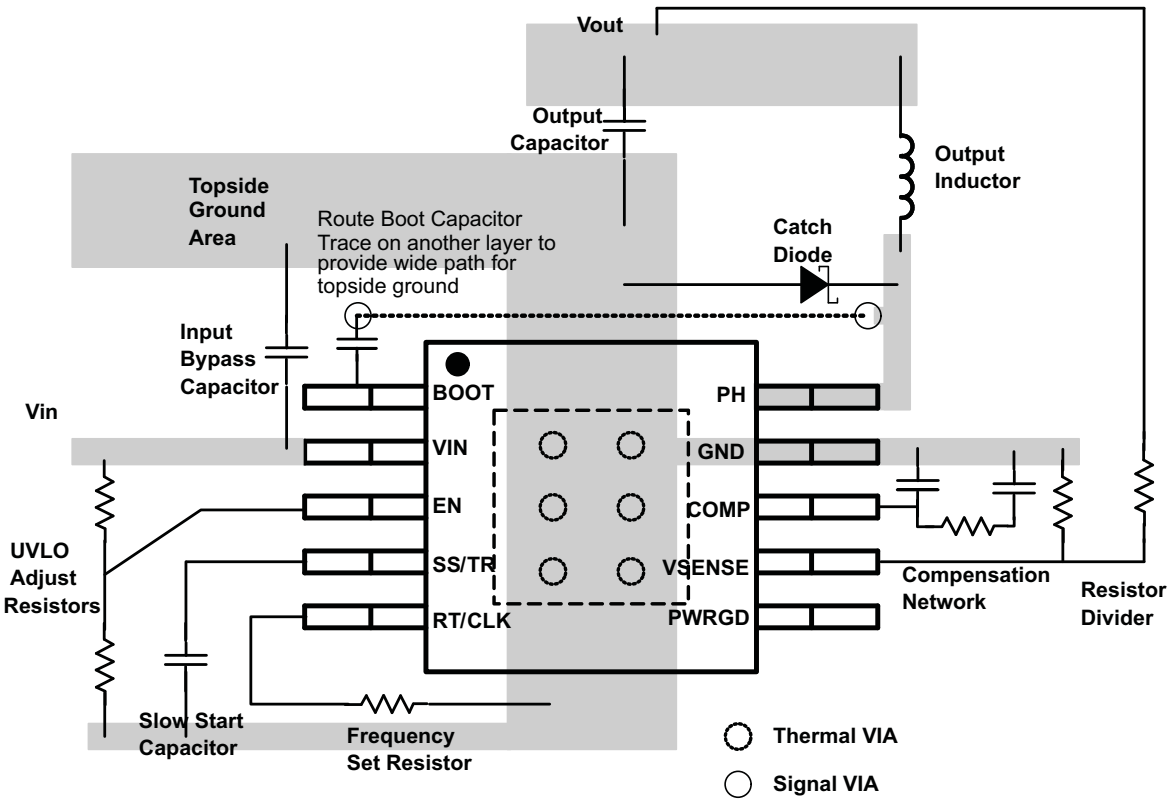

Figure 62. PCB Layout Example

Estimated Circuit Area

The estimated printed circuit board area for the components used in the design of Figure 49 is 0.55 in^2. This area does not include test points or connectors.

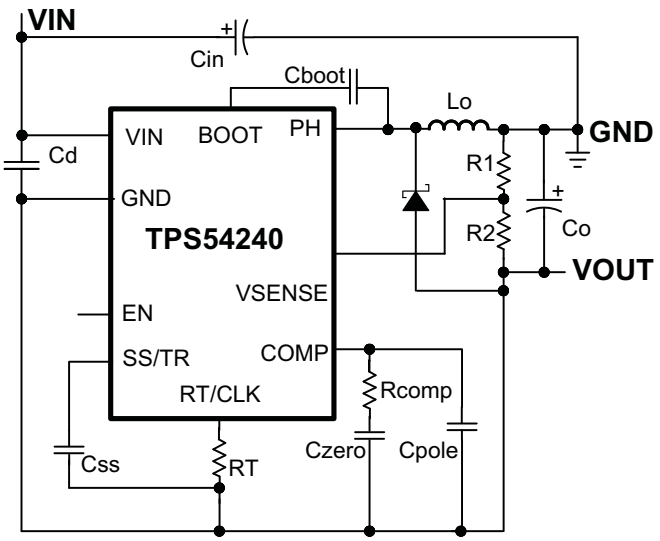

Figure 63. TPS54240 Inverting Power Supply from SLVA317 Application Note

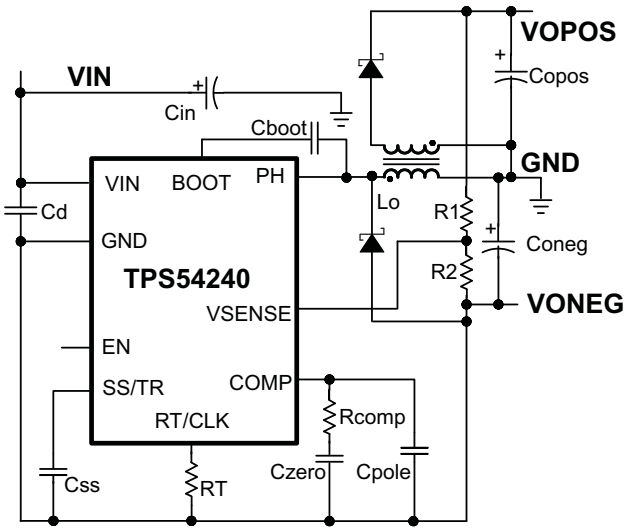

Figure 64. TPS54240 Split Rail Power Supply Based on SLVA369 Application Note

Copyright © 2010, Texas Instruments Incorporated

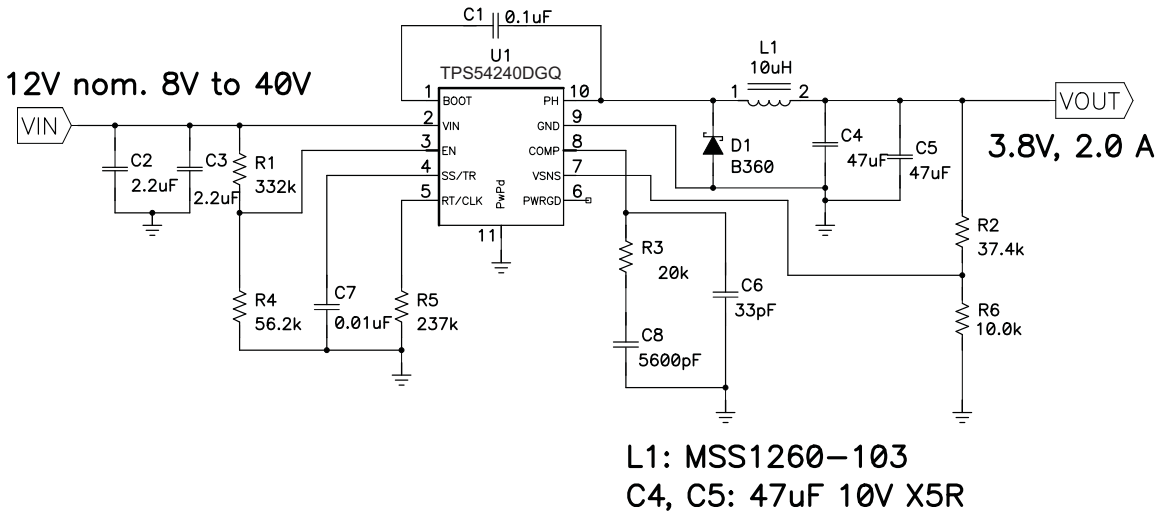

Figure 65. 12V to 3.8V GSM Power Supply

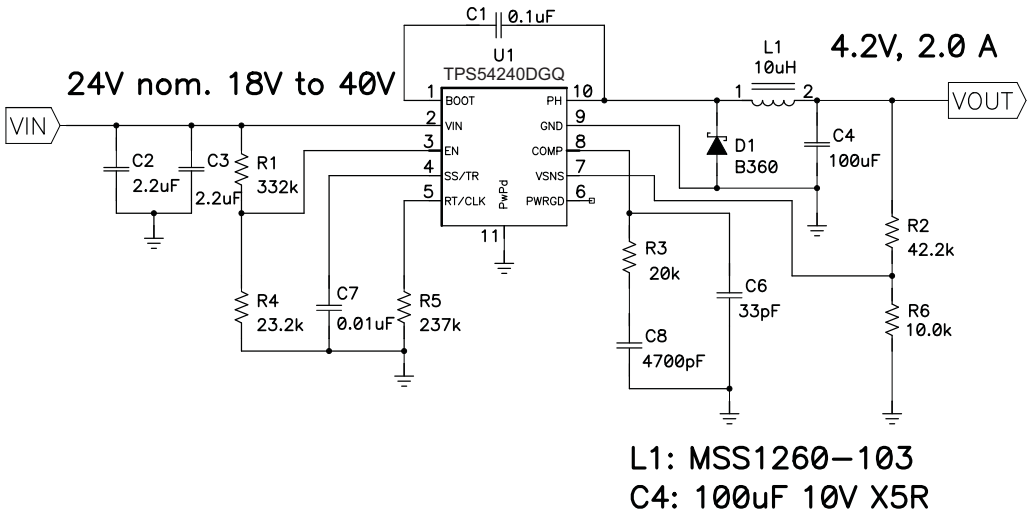

Figure 66. 24V to 4.2V GSM Power Supply

PACKAGING INFORMATION

Orderable Device	Status [1]	Package Type	Package Drawing	Pins	Package Qty	Eco Plan [2]	Lead/ Ball Finish	MSL Peak Temp [3]	Samples (Requires Login)
TPS54240DGQ	ACTIVE	MSOP-PowerPAD	DGQ	10	80	Green (RoHS & no Sb/Br)	CU NIPDAU	Level-1-260C-UNLIM	Contact TI Distributor or Sales Office
TPS54240DGQR	ACTIVE	MSOP-PowerPAD	DGQ	10	2500	Green (RoHS & no Sb/Br)	CU NIPDAU	Level-1-260C-UNLIM	Request Free Samples

[1] The marketing status values are defined as follows:
ACTIVE: Product device recommended for new designs.
LIFEBUY: TI has announced that the device will be discontinued, and a lifetime-buy period is in effect.
NRND: Not recommended for new designs. Device is in production to support existing customers, but TI does not recommend using this part in a new design.
PREVIEW: Device has been announced but is not in production. Samples may or may not be available.
OBSOLETE: TI has discontinued the production of the device.

[2] Eco Plan - The planned eco-friendly classification: Pb-Free (RoHS), Pb-Free (RoHS Exempt), or Green (RoHS & no Sb/Br) - please check http://www.ti.com/productcontent for the latest availability information and additional product content details.
TBD: The Pb-Free/Green conversion plan has not been defined.
Pb-Free (RoHS): TI's terms "Lead-Free" or "Pb-Free" mean semiconductor products that are compatible with the current RoHS requirements for all 6 substances, including the requirement that lead not exceed 0.1% by weight in homogeneous materials. Where designed to be soldered at high temperatures, TI Pb-Free products are suitable for use in specified lead-free processes.
Pb-Free (RoHS Exempt): This component has a RoHS exemption for either 1) lead-based flip-chip solder bumps used between the die and package, or 2) lead-based die adhesive used between the die and leadframe. The component is otherwise considered Pb-Free (RoHS compatible) as defined above.
Green (RoHS & no Sb/Br): TI defines "Green" to mean Pb-Free (RoHS compatible), and free of Bromine (Br) and Antimony (Sb) based flame retardants (Br or Sb do not exceed 0.1% by weight in homogeneous material)

[3] MSL, Peak Temp. -- The Moisture Sensitivity Level rating according to the JEDEC industry standard classifications, and peak solder temperature.

Important Information and Disclaimer: The information provided on this page represents TI's knowledge and belief as of the date that it is provided. TI bases its knowledge and belief on information provided by third parties, and makes no representation or warranty as to the accuracy of such information. Efforts are underway to better integrate information from third parties. TI has taken and continues to take reasonable steps to provide representative and accurate information but may not have conducted destructive testing or chemical analysis on incoming materials and chemicals. TI and TI suppliers consider certain information to be proprietary, and thus CAS numbers and other limited information may not be available for release.

In no event shall TI's liability arising out of such information exceed the total purchase price of the TI part(s) at issue in this document sold by TI to Customer on an annual basis.

TAPE AND REEL INFORMATION

REEL DIMENSIONS

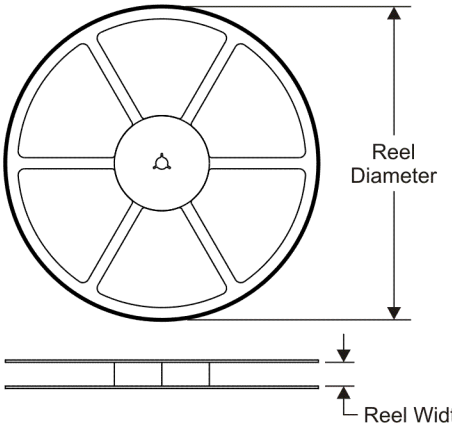

TAPE DIMENSIONS

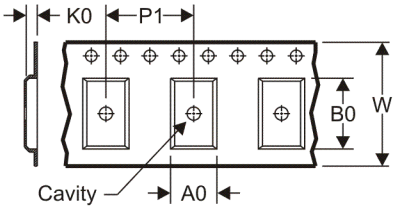

A0	Dimension designed to accommodate the component width
B0	Dimension designed to accommodate the component length
K0	Dimension designed to accommodate the component thickness
W	Overall width of the carrier tape
P1	Pitch between successive cavity centers

QUADRANT ASSIGNMENTS FOR PIN 1 ORIENTATION IN TAPE

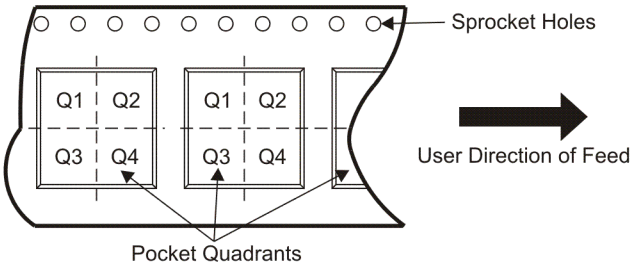

*All dimensions are nominal

Device	Package Type	Package Drawing	Pins	SPQ	Reel Diameter (mm)	Reel Width W1 (mm)	A0 (mm)	B0 (mm)	K0 (mm)	P1 (mm)	W (mm)	Pin1 Quadrant
TPS54240DGQR	MSOP-Power PAD	DGQ	10	2500	330.0	12.4	5.3	3.3	1.3	8.0	12.0	Q1

TAPE AND REEL BOX DIMENSIONS

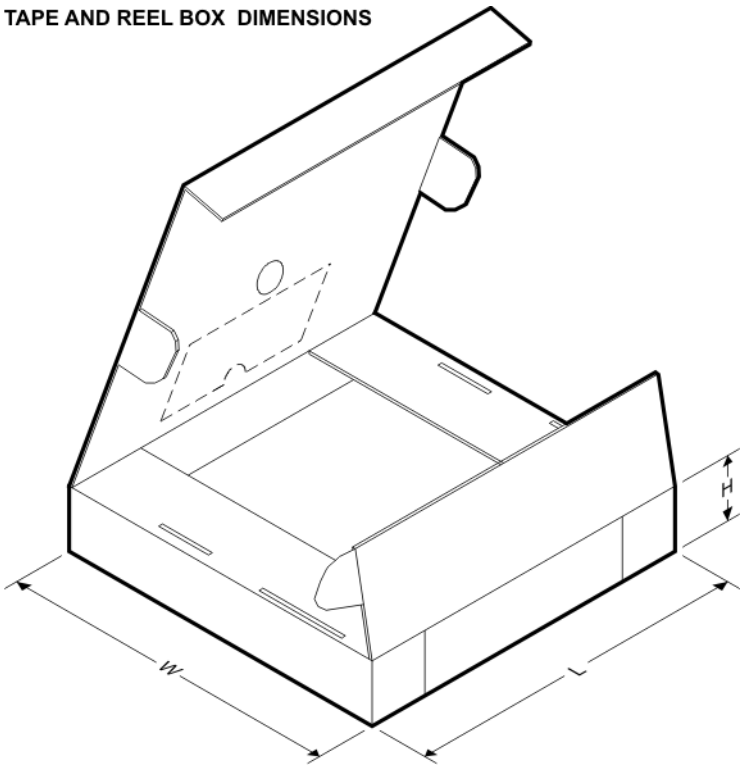

*All dimensions are nominal

Device	Package Type	Package Drawing	Pins	SPQ	Length (mm)	Width (mm)	Height (mm)
TPS54240DGQR	MSOP-PowerPAD	DGQ	10	2500	346.0	346.0	35.0

DGQ (S–PDSO–G10) PowerPAD™ PLASTIC SMALL OUTLINE

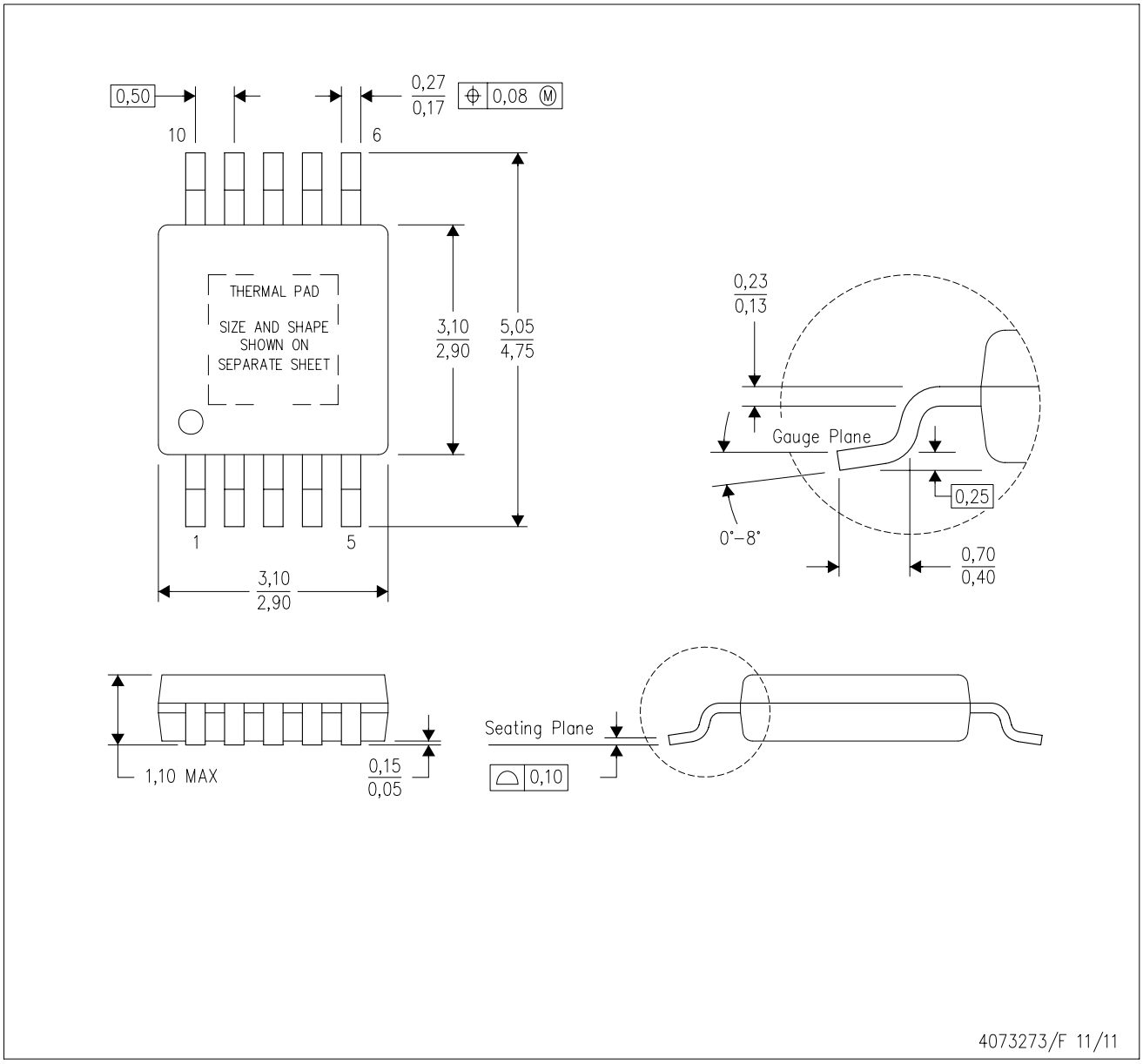

NOTES:
A. All linear dimensions are in millimeters.
B. This drawing is subject to change without notice.
C. Body dimensions do not include mold flash or protrusion not to exceed 0,15.
D. This package is designed to be soldered to a thermal pad on the board. Refer to Technical Brief, PowerPad Thermally Enhanced Package, Texas Instruments Literature No. SLMA002 for information regarding recommended board layout. This document is available at www.ti.com <http://www.ti.com>.
E. See the additional figure in the Product Data Sheet for details regarding the exposed thermal pad features and dimensions.
F. Falls within JEDEC MO–187 variation BA–T.

PowerPAD is a trademark of Texas Instruments.

DGQ (S–PDSO–G10) PowerPAD™ PLASTIC SMALL OUTLINE

THERMAL INFORMATION

This PowerPAD™ package incorporates an exposed thermal pad that is designed to be attached to a printed circuit board (PCB). The thermal pad must be soldered directly to the PCB. After soldering, the PCB can be used as a heatsink. In addition, through the use of thermal vias, the thermal pad can be attached directly to the appropriate copper plane shown in the electrical schematic for the device, or alternatively, can be attached to a special heatsink structure designed into the PCB. This design optimizes the heat transfer from the integrated circuit (IC).

For additional information on the PowerPAD package and how to take advantage of its heat dissipating abilities, refer to Technical Brief, PowerPAD Thermally Enhanced Package, Texas Instruments Literature No. SLMA002 and Application Brief, PowerPAD Made Easy, Texas Instruments Literature No. SLMA004. Both documents are available at www.ti.com.

The exposed thermal pad dimensions for this package are shown in the following illustration.

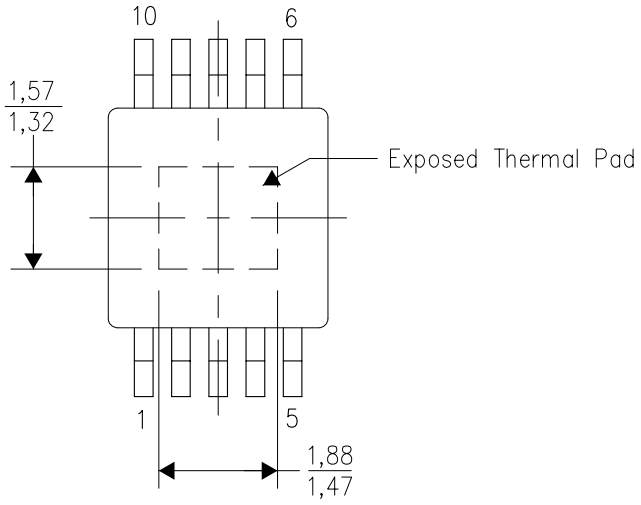

Top View

Exposed Thermal Pad Dimensions

4206324–2/F 01/11

NOTE: A. All linear dimensions are in millimeters

PowerPAD is a trademark of Texas Instruments

DGQ (S-PDSO-G10) PowerPAD™ PLASTIC SMALL OUTLINE

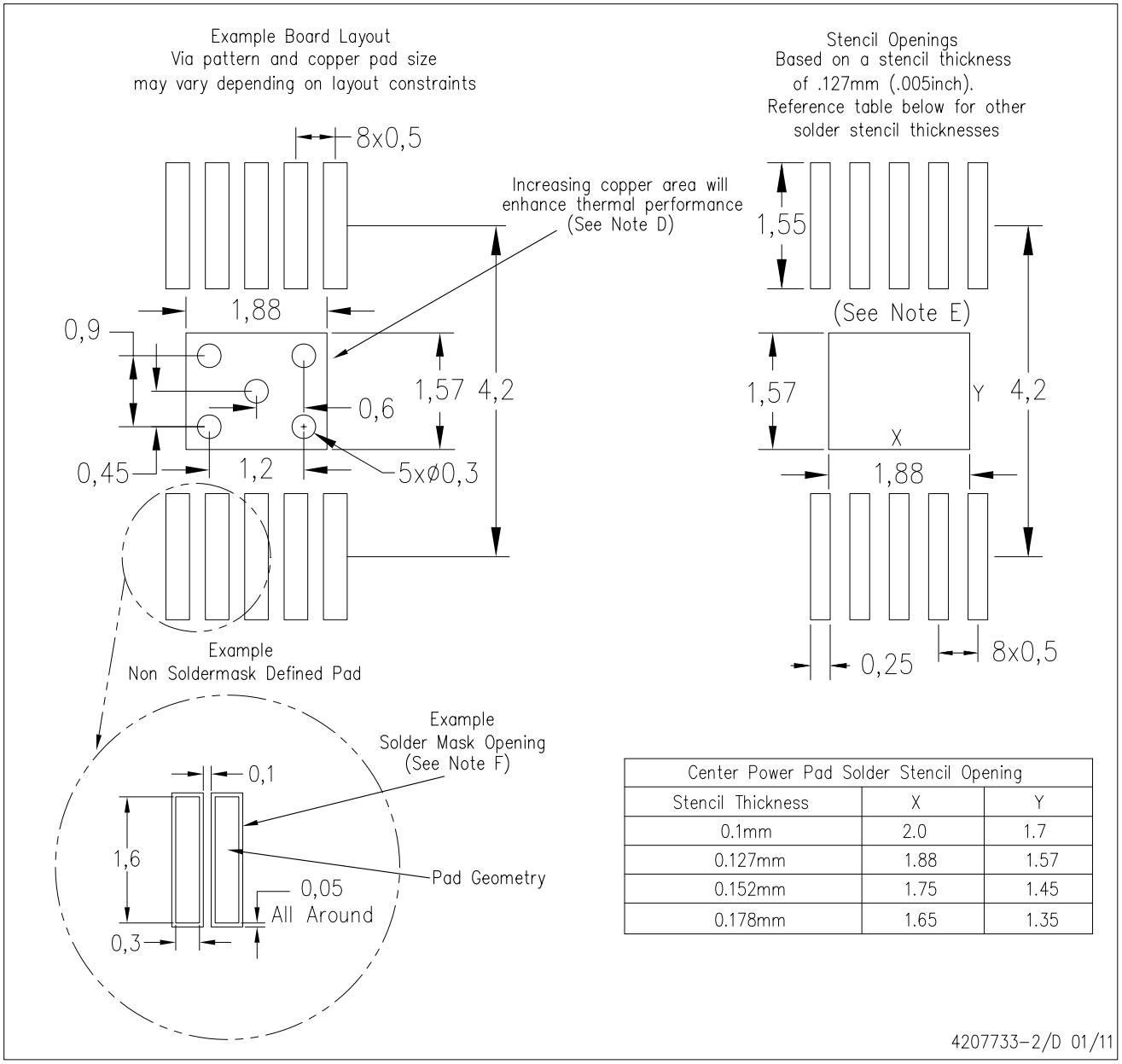

Center Power Pad Solder Stencil Opening		
Stencil Thickness	X	Y
0.1mm	2.0	1.7
0.127mm	1.88	1.57
0.152mm	1.75	1.45
0.178mm	1.65	1.35

NOTES:
A. All linear dimensions are in millimeters.
B. This drawing is subject to change without notice.
C. Customers should place a note on the circuit board fabrication drawing not to alter the center solder mask defined pad.
D. This package is designed to be soldered to a thermal pad on the board. Refer to Technical Brief, PowerPad Thermally Enhanced Package, Texas Instruments Literature No. SLMA002, SLMA004, and also the Product Data Sheets for specific thermal information, via requirements, and recommended board layout. These documents are available at www.ti.com <http://www.ti.com>. Publication IPC-7351 is recommended for alternate designs.
E. Laser cutting apertures with trapezoidal walls and also rounding corners will offer better paste release. Customers should contact their board assembly site for stencil design recommendations. Example stencil design based on a 50% volumetric metal load solder paste. Refer to IPC-7525 for other stencil recommendations.
F. Customers should contact their board fabrication site for solder mask tolerances between and around signal pads.

PowerPAD is a trademark of Texas Instruments

IMPORTANT NOTICE

Texas Instruments Incorporated and its subsidiaries (TI) reserve the right to make corrections, modifications, enhancements, improvements, and other changes to its products and services at any time and to discontinue any product or service without notice. Customers should obtain the latest relevant information before placing orders and should verify that such information is current and complete. All products are sold subject to TI's terms and conditions of sale supplied at the time of order acknowledgment.

TI warrants performance of its hardware products to the specifications applicable at the time of sale in accordance with TI's standard warranty. Testing and other quality control techniques are used to the extent TI deems necessary to support this warranty. Except where mandated by government requirements, testing of all parameters of each product is not necessarily performed.

TI assumes no liability for applications assistance or customer product design. Customers are responsible for their products and applications using TI components. To minimize the risks associated with customer products and applications, customers should provide adequate design and operating safeguards.

TI does not warrant or represent that any license, either express or implied, is granted under any TI patent right, copyright, mask work right, or other TI intellectual property right relating to any combination, machine, or process in which TI products or services are used. Information published by TI regarding third-party products or services does not constitute a license from TI to use such products or services or a warranty or endorsement thereof. Use of such information may require a license from a third party under the patents or other intellectual property of the third party, or a license from TI under the patents or other intellectual property of TI.

Reproduction of TI information in TI data books or data sheets is permissible only if reproduction is without alteration and is accompanied by all associated warranties, conditions, limitations, and notices. Reproduction of this information with alteration is an unfair and deceptive business practice. TI is not responsible or liable for such altered documentation. Information of third parties may be subject to additional restrictions.

Resale of TI products or services with statements different from or beyond the parameters stated by TI for that product or service voids all express and any implied warranties for the associated TI product or service and is an unfair and deceptive business practice. TI is not responsible or liable for any such statements.

TI products are not authorized for use in safety-critical applications (such as life support) where a failure of the TI product would reasonably be expected to cause severe personal injury or death, unless officers of the parties have executed an agreement specifically governing such use. Buyers represent that they have all necessary expertise in the safety and regulatory ramifications of their applications, and acknowledge and agree that they are solely responsible for all legal, regulatory and safety-related requirements concerning their products and any use of TI products in such safety-critical applications, notwithstanding any applications-related information or support that may be provided by TI. Further, Buyers must fully indemnify TI and its representatives against any damages arising out of the use of TI products in such safety-critical applications.

TI products are neither designed nor intended for use in military/aerospace applications or environments unless the TI products are specifically designated by TI as military-grade or "enhanced plastic." Only products designated by TI as military-grade meet military specifications. Buyers acknowledge and agree that any such use of TI products which TI has not designated as military-grade is solely at the Buyer's risk, and that they are solely responsible for compliance with all legal and regulatory requirements in connection with such use.

TI products are neither designed nor intended for use in automotive applications or environments unless the specific TI products are designated by TI as compliant with ISO/TS 16949 requirements. Buyers acknowledge and agree that, if they use any non-designated products in automotive applications, TI will not be responsible for any failure to meet such requirements.

Following are URLs where you can obtain information on other Texas Instruments products and application solutions:

Products		**Applications**	
Audio	www.ti.com/audio	Communications and Telecom	www.ti.com/communications
Amplifiers	amplifier.ti.com	Computers and Peripherals	www.ti.com/computers
Data Converters	dataconverter.ti.com	Consumer Electronics	www.ti.com/consumer-apps
DLP® Products	www.dlp.com	Energy and Lighting	www.ti.com/energy
DSP	dsp.ti.com	Industrial	www.ti.com/industrial
Clocks and Timers	www.ti.com/clocks	Medical	www.ti.com/medical
Interface	interface.ti.com	Security	www.ti.com/security
Logic	logic.ti.com	Space, Avionics and Defense	www.ti.com/space-avionics-defense
Power Mgmt	power.ti.com	Transportation and Automotive	www.ti.com/automotive
Microcontrollers	microcontroller.ti.com	Video and Imaging	www.ti.com/video
RFID	www.ti-rfid.com		
OMAP Mobile Processors	www.ti.com/omap		
Wireless Connectivity	www.ti.com/wirelessconnectivity		

TI E2E Community Home Page e2e.ti.com

Mailing Address: Texas Instruments, Post Office Box 655303, Dallas, Texas 75265
Copyright © 2011, Texas Instruments Incorporated